Document type: **FUNCTIONAL DESCRIPTION**	Vedlegg 5a **Institute of Marine Research (IMR)**
Project: **LoVe (14144)**	
Document title: **Functional specification, SDU and Flying lead**	

Scope:

This document defines the functional description of the Subsea Distribution Unit (SDU) and a jumper with electrical and optical solution, which will be connected to the installed marine cable. The SDU shall supply reliable power and provide quick and reliable communications to subsea equipment by means of wet-mate connectors. The SDU shall include step-down single phase electrical transformers, particularly 3 kv to 230 v, with redundant design to supply reliable electrical of 500 w at each power socket, as well as two fiber at each optical socket.

The jumper shall be terminated on the installed marine cable ensuring quick, reliable and flexible connection via wet-mate connectors to the SDU. This shall ensure SDU can be disconnected from the jumper for maintenance and etc.

2	30SEP2026	Issued to supplier	GZ
1	25AUG2026	Issued to internal	GZ
Issue:	Date	Document status	Prepared by

Institute of Marine Research, Bergen
P.O. Box 1870 Nordnes
NO-5817 Bergen
Tel.: +47 55 23 85 00
post@hi.no

CONFIDENTIAL. All rights reserved. Passing on or copying of this document, use and communication of its contents are not permitted without prior written authorization from IMR.

1 INTRODUCTION

This document gives functional description of one Subsea Distribution Unit (SDU) and one jumper for the installed marine cable, which shall deliver power and fiber communications to the LoVe ocean observatory. Details about material and component selections shall be provided by the Supplier and approved by IMR.

The marine cable together with an SDU was installed in 2013 (details can be found in specification **00506-TTR-SD-26571**). The cable consists of 2 copper conductors of 10 mm^2 and 18 single mode fibers. The SDU was designed with a pig tail solution to the cable system. The cable has a measured length of approximately 19 km, starting from Hovden (Bø, Nordland) to location P1 at a depth of approximately 250 m (Figure 1).

Figure 1. Marine cable route

The original SDU was removed from the cable system in May 2025, particularly the SDU pig tail was cut from the cable in air. Thereafter, the end point of the cable was isolated using 3M™ ScotchCast electrical resin to avoid water penetration into the cable after redeploying it to the seafloor.

In June 2026, the condition of the cable was inspected by WireScan AS (see report **26.1508 for LIRA test**). The measurements detected neither water ingress nor mechanical damage.

On 25 August 2026, an electrician from Bjørnar Lind AS conducted insulation resistance measurements on shore. The cable was megger-tested at different voltages, e.g. 4.51 G ohms at 5085 v, with the detailed results presented in Figure 2.

After the insulation measurements, the cable was loaded with 3 kV voltage power supply without any detected errors. The overcurrent fuse also remained intact during the test.

From the condition measurements, it is proved that the cable is capable of supplying power at 3 kv.

Figure 2. Isolation measurements at 1017, 2544 and 5085 v.

2 REFERENCES

Document:	Document title:
00506-TTR-SD-26571	Design Specification, Cable System
IEC 60502	Extruded solid dielectric insulated power cables for rated voltages from 1 kV up to 30 kV
26.1508 for LIRA test	WireScan cable condition measurement report
NORSOK M-503	Cathodic Protection for Submerged Installations
00506-TTR-XA-207246	SUBSEA DISTRIBUTION UNIT (SDU) ASSEMBLY DRAWING
MRB – loVe P#3444	MRB – loVe P#3444- Havforskningen, Transmark
NORSOK M-501	Surface preparation and protective coating

3 FUNCTIONAL DESIGNS

The design shall follow IEC60502 to ensure robustness of the cable system and flexibility of SDU maintenance.

3.1 Jumper

The jumper shall provide fiber-optic communication using 8 fibers and shall deliver electrical power at 3 kV. The jumper shall be terminated to the installed cable. The Supplier shall consider offshore termination in the design together with offshore work as in the scope of delivery. The jumper shall be rated for a depth of 1000 m, incorporate pressure compensation, and provide galvanic (cathodic) protection, if applied, in accordance with **NORSOK M-503**.

It is expected to reuse design (Figure 3a) and the materials (Figure 3b) issued by IMR for saving environment and delivery lead time. The jumper and cables were designed and assembled by Transmark AS in 2023. Details of the materials can be found in the manufacturing record book (**MRB – loVe P#3444**). The materials consist of 500 m cable (**00506-TTR-SD-26571**), one SEACON Hydralight optical connector, one obsolete Siemens DigiTron optical connector and two Simens electrical connectors (BROV-10-A003-BQ-DB-MC04S and BROV-10-A004-BQ-DB-MC04S).

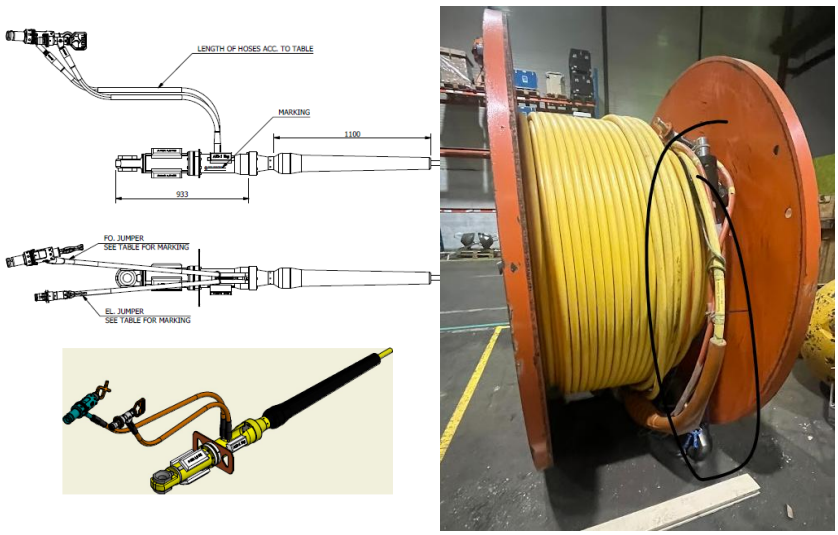

(a) (b)

Figure 3. (a) Concept of the jumper. (b) The materials of jumper.

3.2 SDU

The overall function of the SDU is to enable reliable, quick and flexible connection between the subsea cable and auxiliary subsea equipment.

The SDU shall be provided with 5 off optical and 5 off electrical wet mate connections.

- One off optical connector shall be provided with 8 fibers which shall be mated with the optical connector on the jumper. The other 3 optical connectors shall provide 2 fiber in each connection for auxiliary equipment. Note the Supplier shall ensure that the optical connectors have already been on the market for last 5 years and shall not be obsolete in 10 years.
- One off electrical connector shall be provided to mate with the elector connector one the jumper with a voltage rating of 3 kv. The other 3 electrical connectors shall provide single phase AC power at 230 v in each connection for auxiliary equipment. Note the Supplier shall ensure that the elector connectors have already been on the market for last 5 years and shall not be obsolete in 10 years.
- All the fiber and electrical termination inside SDU shall be in pressure balance with oil filled containers.

The SDU shall consist of one subsea transformer which converts 3 kv to 3 off connections at 230 v. Each 230 v connections shall provide 500 w within a voltage range 220 – 240 v. The transformer shall be redundant and encapsulated in oil filled container which is pressure balanced. Oil compensators to the container shall be visible to ROV.

The Sub-supplier of transformer shall be approved by IMR.

It is expected to reuse the original SDU materials (assembly drawing **00506-TTR-XA-207246**), which shall be issued by IMR for saving environment and delivery lead time.

- The structure (Figure 4) shall be refurbished including protective coating in accordance with **NORSOK M-501** and galvanic (cathodic) protection following **NORSOK M-503** to ensure its design life of 20 years. The protection roof shall be replaced with glass fiber.
- The ROV connectors shall be refurbished for possible reuse. Currently, there are 2 off SEACON Hydralight receptacles, and 2 off Simens electrical connectors (BROV-10-B004-BQ-DB-MC04P)
- Wet-mate connector protective dummies shall be refurbished.

Note the Supplier shall inspect the materials for possible reuse which must be approved by IMR.

Figure 4. Reusable SDU structure.

Document type: **TECHNICAL DESCRIPTION**		
Project: **Statoil LoVe**	Nexans document number: **00506-TTR-SD-26571 (DA309-TD)**	Issue: **03E**
Document title: **Design Specification, Cable System**	Page: **1 of 14**	Category: **EXT**

Scope:
This document gives the technical description of the cable system for the LoVe environmental surveillance cable system.

The cable system consists of an electro optical umbilical with a Subsea Distribution Unit (SDU) to enable quick and reliable connection between the umbilical and auxiliary sub-sea equipment by means of wet-mate connectors and flying leads. The SDU also include an electrical transformer 3kV/220V and an umbilical tail for future umbilical extension.

The cable SAP number: 10234925

Issue:	Date:	Document Status:	Prepared:	Checked:	Approved:	Released:
03E	11-12-2012	Approved for Construction	IJV	TAA	ArH	BBr
02R	23-11-2012	Issued for Company Review	ArH	TAA	IJV	BBr
01D	21-11-2012	Issued for IDC	ArH/IJV			

Company:	Company's contract no.:
	4502613024
	Company's document no.: **TBD**
	Tag number: **N/A**
	Area code: **N/A** System code: **N/A**

KONFIDENSIELL. Alle rettigheter forbeholdes. Videreføring eller kopiering av dette dokumentet, samt bruk eller kommunisering av dets innhold, er ikke tillatt uten forutgående skriftlig tillatelse fra Nexans Norway AS.

NEXANS NORWAY AS
Postboks 6450, Etterstad, 0605 Oslo
P.O. Box 6450, Etterstad, N-0605 Oslo, Norway

CONFIDENTIAL. All rights reserved. Passing on or copying of this document, use and communication of its contents are not permitted without prior written authorization from Nexans Norway AS.

REVISION RECORD

Issue	Date	Section(s)	Page(s)	Comments
01D	21-11-2012			New document, based on design spec DA307
02R	23-11-2012			Black longitudinal stripe added for the outer sheet. Transformer info added
03E	11-12-2012	6	13	Included wiring diagram for the transformer

TABLE OF CONTENTS

1 INTRODUCTION 4

2 REFERENCES 4
2.1 General References 4
2.2 Project References 4

3 ABBREVIATIONS & DEFINITIONS 4

4 CABLE DESIGN 6
4.1 General 6
4.2 Element Details 6
4.3 Element lay-up 7
4.4 Characteristics 8
4.5 Power Transmission 9
4.6 Fibre Marking 10
4.7 Conductor/Cable Marking 10

5 CABLE CROSS-SECTIONAL DRAWING 11

6 SUBSEA DISTRIBUTIONUNIT(SDU) 12

1 INTRODUCTION

This document gives the technical description of the cable system for the LoVe environmental surveillance cable system.

The cable system consists of an electro optical umbilical with a Subsea Distribution Unit (SDU) to enable quick and reliable connection between the umbilical and auxiliary sub-sea equipment by means of wet-mate connectors and flying leads. The SDU also include an electrical transformer 3kV/220V and an umbilical tail for future umbilical extension.

This document describes a 10mm^2 pair sub-sea cable for long haul, one phase, and small power transmission. IEC60502-1 has been used as a guideline for conductor insulation thickness. The insulation rating is 1.8/3 kV.

2 REFERENCES

2.1 General References

Document:	Document title:
IEC 60228	Conductors of insulated cables
IEC 60502	Extruded solid dielectric insulated power cables for rated voltages from 1 kV up to 30 kV
TR1232	Subsea Umbilicals and Cables. Statoil Best Practice.
ISO 13628-5	Petroleum and natural gas industries-Design and operation of subsea production systems-Part 5 Subsea umbilicals
ISO 9001	Quality Management Systems
ISO 14001	Environmental Management System

2.2 Project References

Document:	Document title:
4502613024	Contract
00506-EQA-TQ-26564	Project Quality Plan, Cable System
00506-EQA-TQ-26565	Inspection and Test Plan, Cable System
00506-TTR-ST-26574	Acceptance Test Specification, Cable System
00506-TTR-XO-207245	System Overview Drawing, Cable System
00506-TTR-XA-207246	Subsea Distribution Unit(SDU) Assembly Drawing
00506-TTR-DP-26572	Tronic Electrical Connector Data Sheet
00506-TTR-DP-26573	Seacon Optical Connector Data Sheet
00506-TTR-DP-26573	Transformer Data Sheet

3 ABBREVIATIONS & DEFINITIONS

AT	Acceptance Test
Cu	Copper
EN	Europa Norm
FAT	Factory Acceptance Test
FO	Fiber Optic
FOTU	Fiber Optic Termination Unit
IEC	International Electro Technical Commission
ISO	International Standards Organization
ITU-T	International Telecommunication Union – Telecommunication Standardization Sector / ITU-T Recommendation (standard)
N/A	Not Applicable
OD	Outer Diameter
SDU	Subsea Distribution Unit
TD	Technical Description
TIA	Telecommunications Industry Association
TR	Technical Report

Company	Statoil ASA
Contractor	Nexans Norway AS

4 CABLE DESIGN

4.1 General

The design of the electrical cable consists of two insulated 10mm^2 copper conductors in a triad configuration with a fibre optic element.
The electrical conductors provide a one phase, long haul, small power transmission system for the systems to be connected at the cable end module.

IEC60502-1 has been used as a guideline for conductor insulation thickness. The insulation rating is 1.8/3 kV.

The armouring consists of two layers of contra helically applied steel wires. Hence, the umbilical must be coiled in figure 8 – or spooled on reel/turntable.

A polyethylene jacket is applied over the armouring for external protection.

The cable design complies to Statoil Best Practice, ref TR 1232, except from that the electrical conductors are not filled.

The cable design is based on Nexans field proven design concept, and considered qualified without any additional verification tests.

Seabed stability has not been evaluated.

4.2 Element Details

Process/ Material		**Nominal thickness [mm]**	**Nominal outer diameter [mm]**
UNIT-FO	**Fibre Optic element**		
Optical fibre	18SM (9/125µm)		0.25
Tube	Steel tube with filling compound	0.25	2.5/3.0
Sheath	Polyethylene, black		9.7
UNIT-P10	**Power conductor, 10mm^2, 3kV**		
Conductor	Cu, 10mm^2 (7 strand)		3.9
Insulation	Semiconductive polyethylene Polyethylene, colour coded		4.3 9.7

4.3 Element lay-up

Process/ Material		Nom. thickness (mm)	Nom. outer diameter (mm)
Cable Core/Lay Up			
Lay-up Filling Wrapping	2 x unit P10 + 1 x FO PE fillers and petroleum jelly Neutral tape	9.7	21 21.5
Inner sheath	Polyethylene, black	1.8	25.2
Armouring	Galvanized steel wires: 1st layer 2nd layer	 23x3.6 42x2.4	 32.5 37.5
Filling	Bitumen and wrapping		
Outer sheath	Polyethylene, yellow w/ black stripe	2.4	42.5

4.4 Characteristics

Physical Characteristics	Unit	Nominal value	±
Cable outer diameter	mm	42.5	1
Weight in air, approx.	kg/m	4.5	
Weight in seawater, approx.	kg_f/m	3	
Minimum bending diameter	m	1.4	
Operating temperature range	°C	-15 to+50	-
Storage temperature range	°C	-40 to+60	-
Installation Temperature Range	°C	-5 to +40	
Armouring Breaking load	kN	500	-
Max Installation Load	kN	150	-

Optical Characteristics, ITU-T G.652.D	Unit	Nominal value	±
Operating wavelength	nm	1310 - 1550	
Mode field diameter @ 1310 nm	µm	9.2	0.4
Fibre cladding diameter	µm	125	1
Coating diameter, uncoloured fibres	µm	245	10
Mode field/cladding concentricity error	µm	≤ 1	-
Cladding non circularity	%	≤ 1	-
Localised attenuation variation	dB	≤ 0.1	-
Refractive index @ 1310 nm	-	1.467	-
Refractive index @ 1550 nm	-	1.467	-
Attenuation @ 1310 nm	dB/km	≤ 0.35	
Attenuation @ 1550 nm	dB/km	≤ 0.25	-
Chromatic dispersion @ 1285-1330 nm	ps/nm·km	≤ 3.5	-
Chromatic dispersion @ 1550 nm	ps/nm·km	≤18	-
Polarization Mode Dispersion. PMD	ps/√km	≤ 0.2	-
Fibre proof test level	%	≥ 1.0 (1s)	-

Electrical characteristics (target values) In Service	Unit	Nominal value	±
DC resistance, max	Ω/km	1.9	
AC resistance, max @ 50Hz Rloop	Ω/km	3.9	
Typical mutual capacitance "pair mode"	nF/km	55	10
Typical mutual inductance "pair mode" @ 50Hz	mH/km	0,85	0.15
Insulation resistance @ 500 V DC	GΩ•km	>1	-
Voltage rating	kV	1.8/3.0(3.6)	-
HVDC test, 5 minutes (conductor-conductor)	kV	15.6	-

4.5 Power Transmission

Electrical power transmission @ 50Hz for a 16km cable length, and for a future extension of +25 km cable length are calculated in the following. The calculations are shown in Table 4.1

It has been specified that the cable system shall deliver 1kVA @220V, 16km from land (Hovden Lofoten) to a sea bed environmental monitoring instrument site. Further all provisions for a future new cable and site +25km further distance shall deliver 1.5kVA @220V.
The supply system shall use a cable service voltage of 3kV with suitable transformers in all terminations.

For potential energy savings, calculations have also been performed utilizing a 4H charge current compensation coil /inductor at shore/supply end. The effect for the 16km system length is marginal(1-2kVA). However, the compensation effect is significant on the 41 km system.

Table 4.1. Power Transmission Calculations

Cond/ Comp.	**Cable Length**	**Input Voltage ph-ph**	**Power Input**	**Supply Current**	**Output Current**	**Load Voltage and Loss**	**Impe-dance**	**Power Load End**
mm²	**km**	**kV**	**kVA**	**A**	**A**	**kV %**	**kOhm**	**kVA**
2x10 No comp	16	2,9	<3	<0.9	0,35	2,85 0.7	8,4	1
2x10 No comp	41	2,9	<7	<2.5	0.6	2,7 (2-5)	4,7	1.5
2x10 Yes comp	41	2,9	3	1	0.6	2,7 (2-5)	4,7	1.5

4.6 Fibre Marking

Element	Marking	
UNIT-FO	**Fibre numbering code, 1-18 fibres[1]**	
Fibre colour	**0/0**	**1/50**
Blue	1	13
Orange	2	14
Green	3	15
Brown	4	16
Grey	5	17
White	6	18
Red	7	
Natural	8	
Yellow	9	
Violet	10	
Pink	11	
Aqua	12	

4.7 Conductor/Cable Marking

Element	Marking
Power Conductors	Pair # 1: Blue, Red
FO	Black
Inner and Outer Sheath	<Production order no.> Nexans Norway High Voltage 2 x 10mm^2 +18 SM 3kV <year> <meter>

[1] The ring stripe marking, A/B, is defined as follows:
A = Number of ring stripes
B = Spacing between ring stripe groups in mm

5 CABLE CROSS-SECTIONAL DRAWING

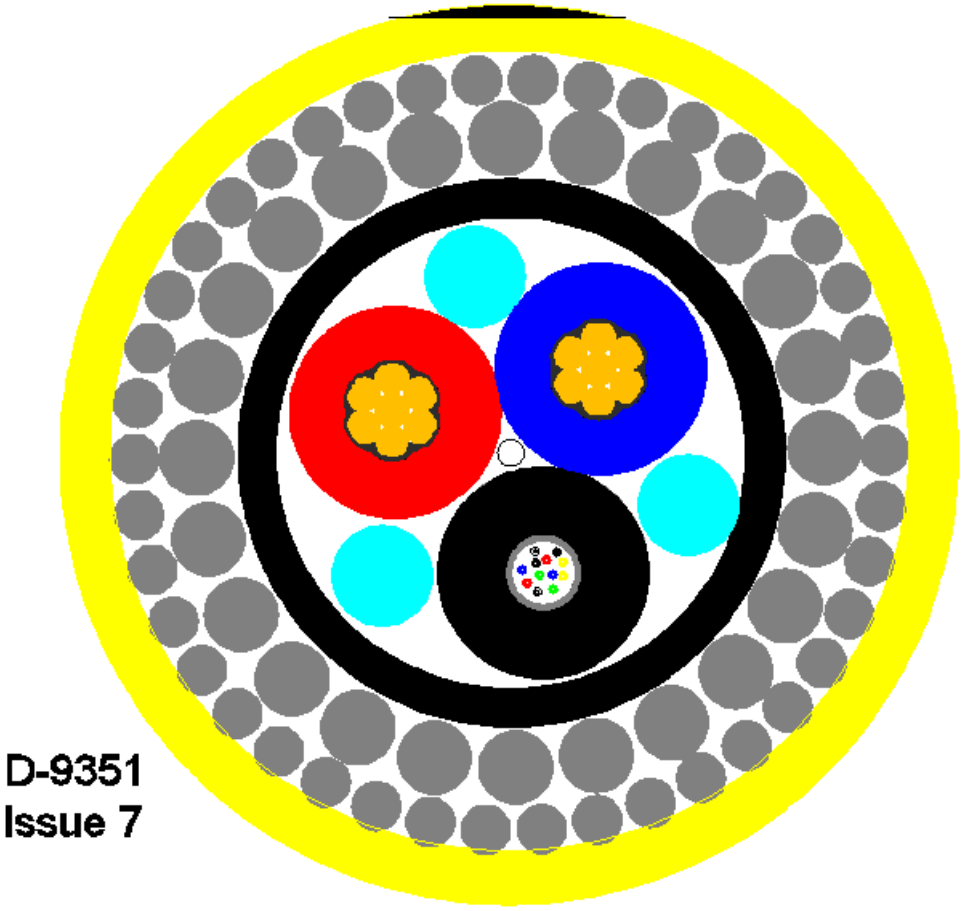

6 SUBSEA DISTRIBUTION UNIT (SDU)

The overall function of the Subsea Distribution Unit (SDU) is to enable quick and reliable connection between the subsea cable and auxiliary sub-sea equipment.

The SDU principle drawing is shown in Figure 6.1.

Further design details are described in the SDU Assembly Drawing, ref 00506-TTR-XA-207246.

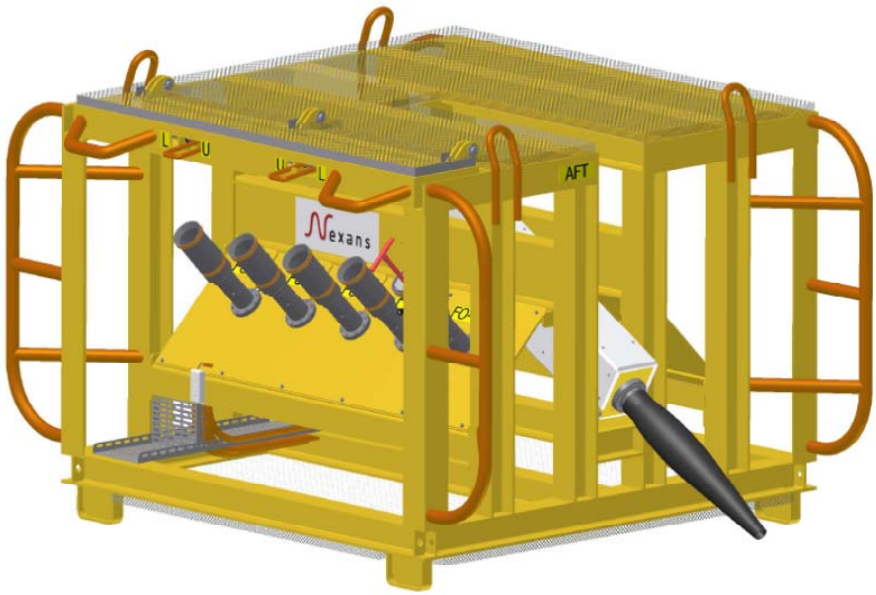

Figure 6.1 Subsea Distribution Unit (SDU)

The main cable and a 500 m extension cable will be mechanically terminated at the SDU, where the cable core with conductors and optical fibres will be directed to an Oil-filled termination box through a seal to the cable inner sheath.

The oil filled termination box will contain the Fiber Optic Termination Unit (FOTU), to terminate the FO, and the 1kVA electrical transformer 3kV/220V. The oil filled termination box is provided with two chambers connected through pressure penetrators for the copper conductors and pressure seals for the FO element, ref Figure 6.2.

The transformer has an open penetrable paper insulated design, for use in oil filled environment/ chambers. Electrically it consists of two halves connected in series, each with its own ring ferrite core and thus dividing the 3kV between each other, mechanically on top of each other.

The schematic wiring diagram for the transformer is shown in Figure 6.2

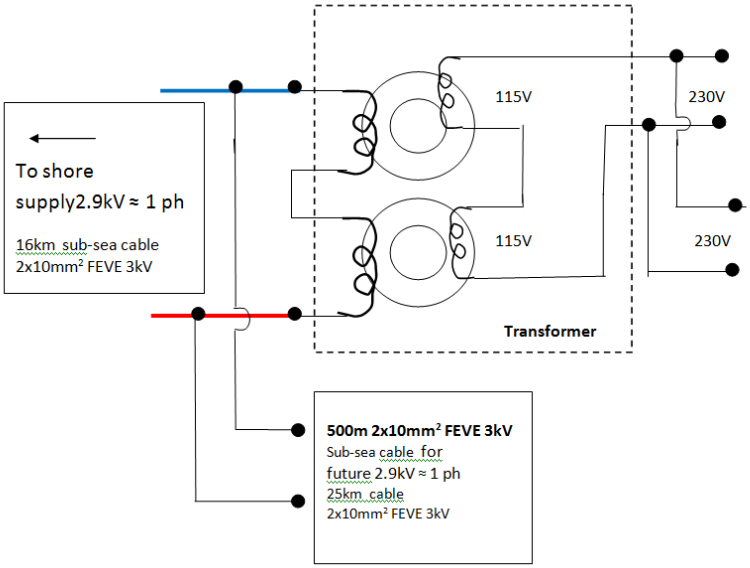

Figure 6.2. Schematic wiring diagram for the transformer

Further details for the transformer are given in data sheet 00506-TTR-DP-26573.

The SDU will be provided with 2 off Seacon hydralight, top assembly, bulkhead, uth, 8-CH, SM, w/funnel (Seacon Dwg. No: 7740-110) and 2 off Digitron, ROV Mated, Flange Mounted Receptacle connector, 4-way pin, omnitek MK2 hose fitting (Tronic Type: BROV-10-B004-BQ-DB-MC04P).

Further details for the Digitron connectors are described in Tronic Electrical Connector Data Sheet, ref 00506-TTR-DP-26572.

Further details for the Seacon connectors are described in Seacon Optical Connector Data Sheet, ref 00506-TTR-DP-26573.

Further system overview details are shown on System Overview Drawing, ref 00506-TTR-XO-207245.

Termination principles are shown in Figure 6.3

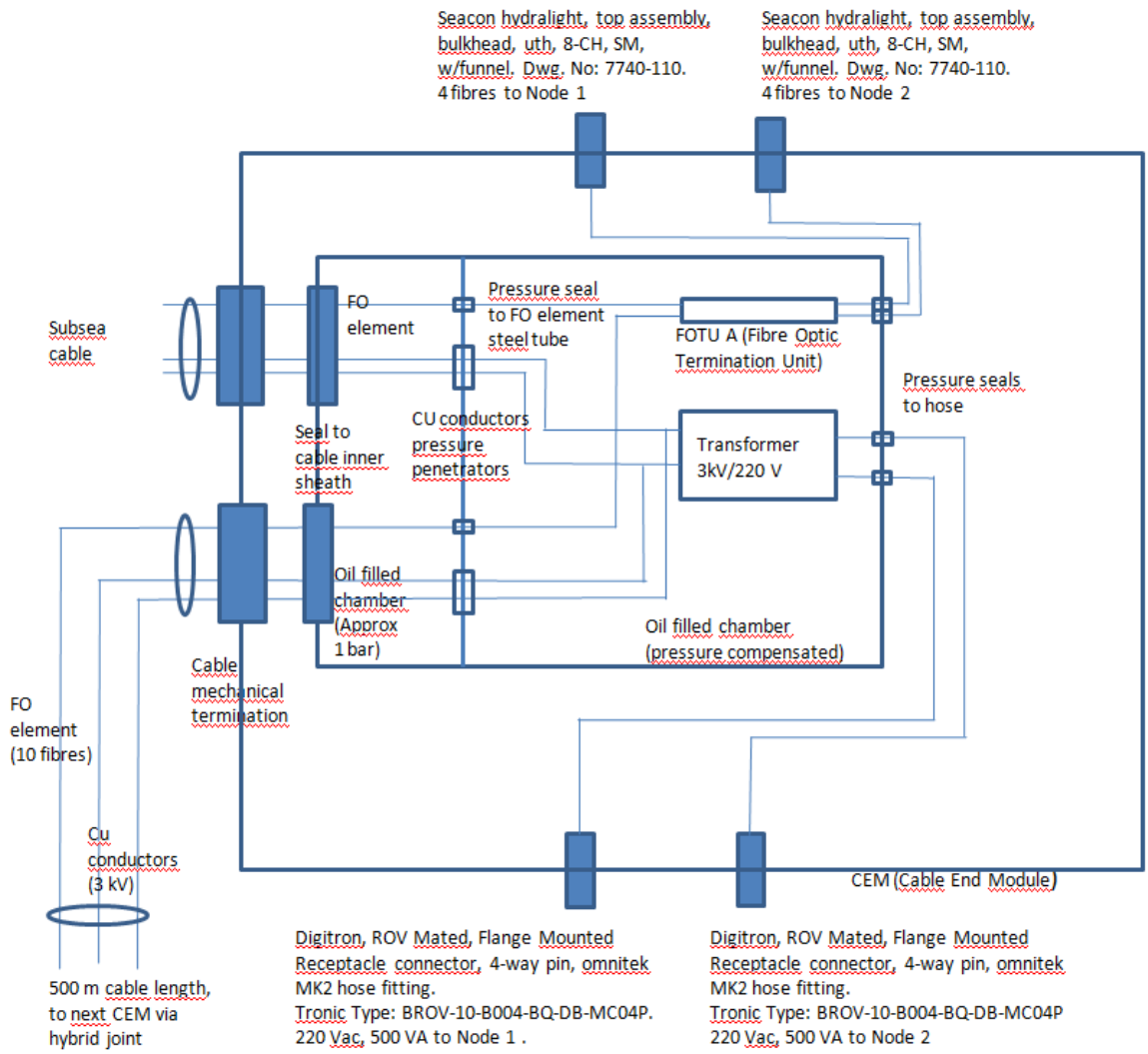

Figure 6.3. Termination Principles for the SDU.

C (0,14 : 1)

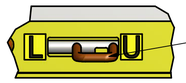

In order for the ROV to gain access to the connectors, the hatch must be lifted.
To lift the hatch the ROV must pull laterally to lock "L" or unlock "U" the hatch

ROV operated hatch must be lifted to gain access to the connectors, after unlocking the hatch.

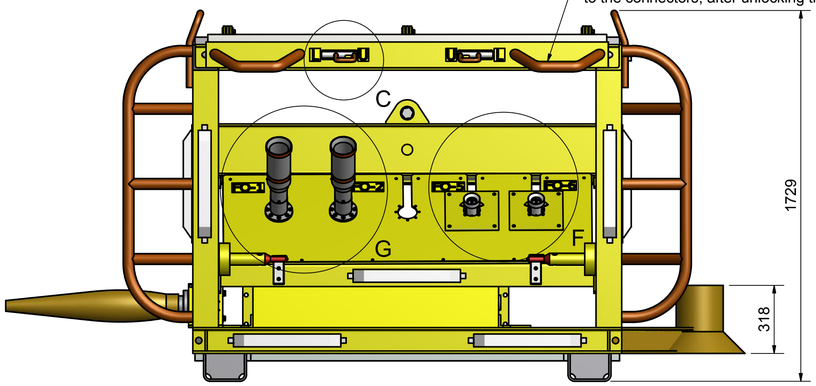

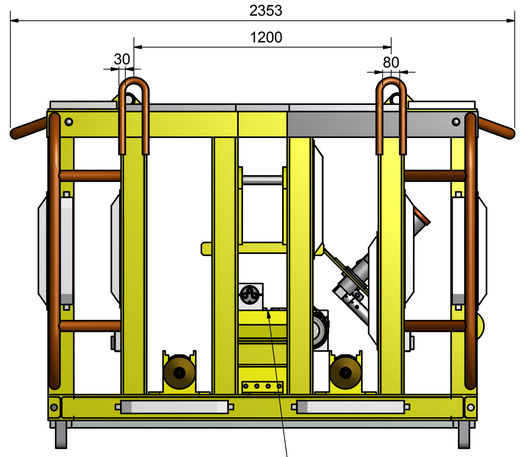

G (0,14 : 1)

FO1 and FO2 Aquasign ROV marking for the Seacon Optical Connectors

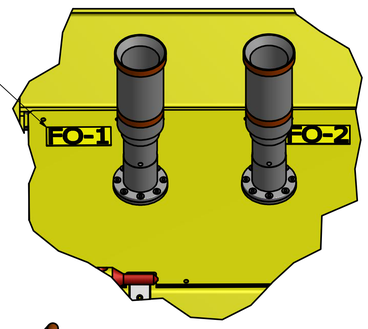

F (0,14 : 1)

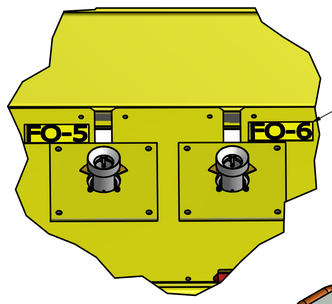

FO5 and FO6 Aquasign ROV marking for the Tronic Electrical Connectors

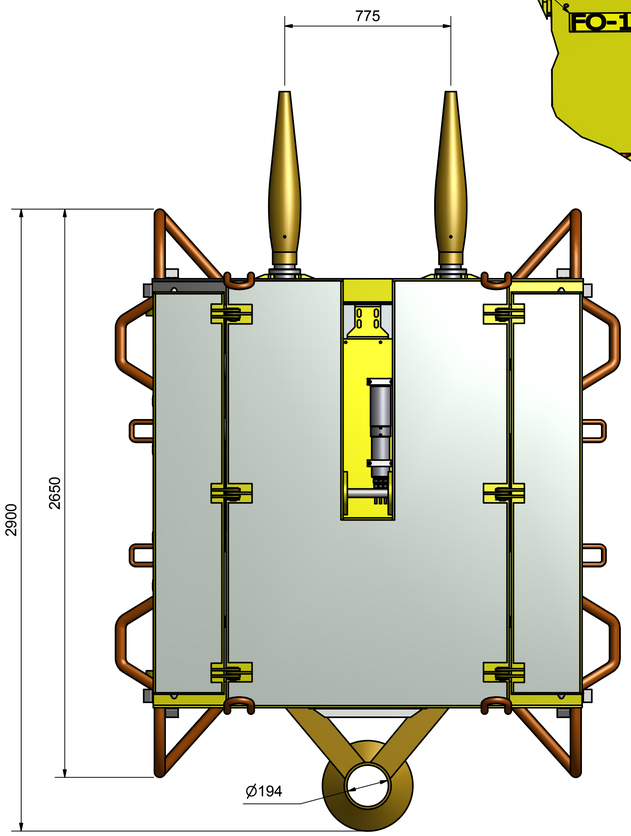

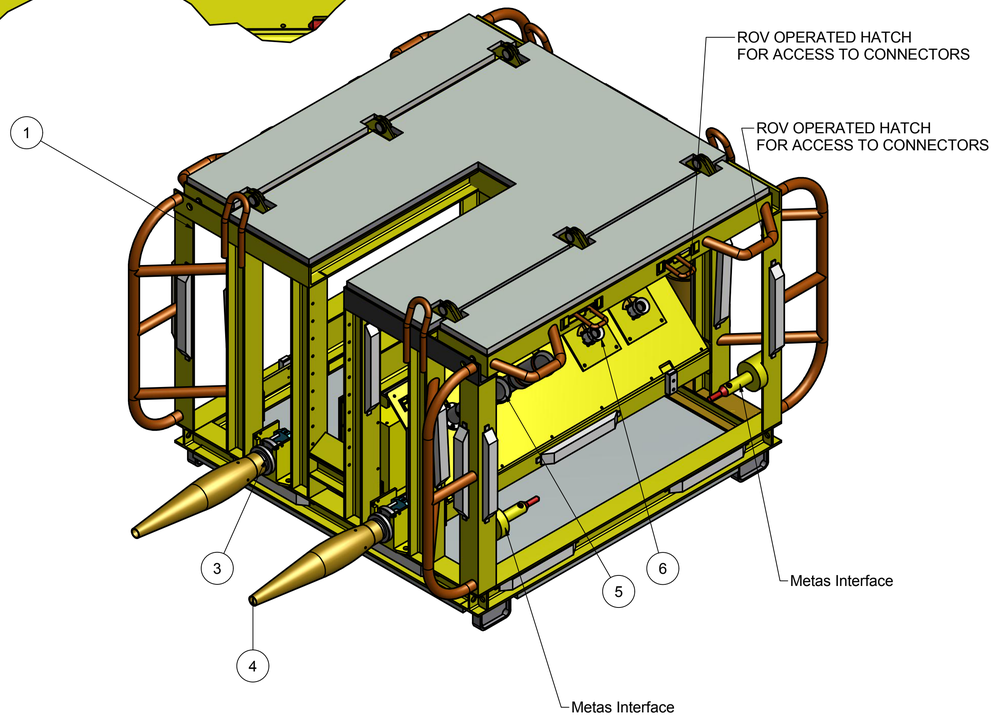

Vedlegg 5c

GENERAL NOTES:

1. THE DRAWING IS MADE IN ACCORDANCE WITH NORWEGIAN DRAWING STANDARD.
2. TOLERANCES ARE IN ACCORDANCE WITH NS-ISO 2768-1m.
3. THE AS BUILT DOCUMENTATION REQUIREMENTS, FOR ALL PROCURED ITEMS, SHALL BE AS SPECIFIED IN THE QUALITY SURVEILLANCE PLAN AND INCLUDED IN ALL P.O.

PROJECT SPECIFIC NOTES:

REFERENCE DOCUMENTS

1. 00506-EM-NX-ST-0002 DESIGN SPECIFICATION, CABLE SYSTEM
2. 00506-TTR-XO-207245 SYSTEM OVERVIEW DRAWING, CABLE SYSTEM
3. 00506-TTR-DP-26786 SEACON HYDRALIGHT DATA SHEET
4. 00506-TTR-DP-26572 TRONIC DIGITRON DATASHEET

SURFACE TREATMENT:
SURFACE TREATMENT ACCORDING TO NORSOK M-501, SYSTEM NO. 7B

COLOURS:
SUBSEA: YELLOW, RAL 1004
QUALIFIED LIFTING PAD EYES: ORANGE, RAL 2004

MASS:
1. MASS IN AIR: 2900 kg
2. MASS SUBMERGED: 2550 kg

ITEM	DESCRIPTION	QTY	DWG. NO.	MATERIAL
6	TRONIC DIGITRON 4WAY RECEPTACLE	2		
5	HYDRALIGHT, 8CH, W/FUNNEL	2		
4	BEND STIFFENER	2		PUR
3	MTU	2		
2	OIL FILLED CHAMBER ASSY	1	207246_A101	
1	SDU FRAMEWORK	1	207246	

PARTS LIST

REVISION	DATE	REVISION STATUS	DRAWN BY	PREPARED	CHECKED	APPROVED
A3	09.05.2013	AS-BUILT	GUL	GUL	EAA	IJV
E2	09.05.2013	ISSUED FOR CONSTRUCTION	DRS	DRS	GUL	IJV
D1	03.05.2013	ISSUED FOR IDC	DRS	DRS	GUL	
D0	19.03.2013	ISSUED FOR DIC	DRS	DRS		

PROJECTION | SCALE: | FRAME: A1

NEXANS NORWAY AS

COMPANY: Statoil

PROJECT / DRAWING TITLE: STATOIL LOVE
SUBSEA DISTRIBUTION UNIT (SDU)
ASSEMBLY DRAWING

AREA CODE: N/A
SYSTEM CODE: N/A
COMPANY'S DRAWING NUMBER: N/A
CONTRACT NUMBER: 4502613024
TAG NUMBER: N/A
NEXANS DOCUMENT / DRAWING NUMBER: 00506-TTR-XA-207246
REVISION: A3

Nexans

CONFIDENTIAL: ALL RIGHTS RESERVED. PASSING ON OR COPYING OF THIS DOCUMENT, USE AND COMMUNICATION OF ITS CONTENT IS NOT PERMITTED WITHOUT PRIOR WRITTEN AUTHORIZATION FROM NEXANS NORWAY AS.

Vedlegg 5d

Havforskningsinstituttet
Boks 1870 Nordnes
5817 Bergen
Norway

Wirescan AS
Rosenholmveien 25
NO-1414 Trollaasen
NORWAY
E-mail: info@wirescan.no
Web: www.wirescan.no
Vat Number: NO 988 777 102
MVA

Your contact: Guosong Zhang
Your reference: guosong.zhang@hi.no

Our contact : Vidar Bergli
Our reference: vb@wirescan.no

28/05/2026

LIRA test

Quotation: 26.1508

Dear Guosong,
The reference is made to our Teams call. Please find hereby our Quotation: 26.1508 for LIRA test.

The scope is to perform a LIRA condition assessment on the 19 km subsea cable at the LoVe observatory. Wirescan will travel to the site, perform a LIRA test, and analyze the data and provide a report within 3 weeks after we have collected the data.

Time Schedule

The scheduled time for measurements must be agreed according to the Wirescan and Havforskningsinstituttet's availability.

Customer: Havforskningsinstituttet
Quotation: 26.1508
28/05/2026

We propose the following schedule:

Day 0: Arrival at location
Day 1: LIRA measurements
Day 1 or 2: Departure in the evening of Day 1 or in the morning of Day 2 depending on available flights

The final dates for measurements must be confirmed no later than 1 week before the commencement date, to allow Wirescan to prepare and mobilize for measurements. If Wirescan is notified, or schedule is changed, closer than 1 week before commencement date, an extra charge of 30% will be added to the Mobilization/demobilization, Cable Measurement and LIRA rental price.

Price

All prices are quoted ex VAT and/or other governmental taxes and/or fees.

No	Name	Unit price	Quantity	Subtotal
1.	Preparations	NOK 17.600	1	NOK 17.600
2.	Field Service Onshore	NOK 17.600	1	NOK 17.600
3.	LIRA One Rental	NOK 25.000	1	NOK 25.000
4.	Cable Analysis and Reporting	NOK 25.000	1	NOK 25.000
5.	Mobilisation, Demobilisation	NOK 10.000	1	NOK 10.000
6.	Travel cost *)	NOK 0.00	1	NOK 0.00
7.	**Total**			**NOK 95.200**

Notes:

- Travel costs (flights, hotel, allowances, etc.) will be invoiced at cost plus 15% handling charge.
- Waiting time at site by reasons not caused by Wirescan will be invoiced based on the offered man/hour rates (8 hours per day).
- Additional work will be charged according to the rates above.
- If the travel or measurement is performed on a Saturday or Sunday, an extra charge on 100% will be added to the field service rate

Customer: Havforskningsinstituttet
Quotation: 26.1508
28/05/2026

Delivery schedule:	To be agreed
Payment terms:	Net per 30 days
Invoicing schedule:	The invoice will be sent when the first draft of the report is provided
Late payment:	Interest in late payment will be charged 5.0 % per month.

Unless otherwise stipulated in the Quotation, Wirescan Standard Terms and Conditions (WSTC) shall apply. WSTC are attached to this Quotation and constitute an integral part thereof.

We hope the Quotation meets your expectations and look forward to hearing from you soon.

Yours sincerely,

Vidar Bergli
VP Sales
Wirescan AS
Mobile: + 47 95939500

Customer: Havforskningsinstituttet
Quotation: 26.1508
28/05/2026

Wirescan Standard Terms and Conditions

Revision date 20/03/2023
Wirescan AS
Trollaasen, Norway

Contents

General 10
Formation of the Contract 10
Wirescan Quotation 10
Prices 10
Terms of Payment and Default Interest 11
Delivery of Products and Services 11
Mobilization, demobilization and travel 12
Termination, cancellation, and suspension. 12
Title and Risk 12
Intellectual and Industrial Property rights 13
Force Majeur 14
Warranty 14
Limitation of Liability 14
Exclusions 14
Confidentiality 14
Changes and Variations 15
Governing Law 15
Appendix 1. Wirescan Certificate of Warranty 15
Warranty period for hardware. 16
Warranty period for software. 16
A notice of a defect. 16
Defect remediation and Warranty Service for hardware 17
Defect remediation of software 17
Exclusions and void of Warranty 18

Appendix 2. Wirescan Terms for Products and Services....19
LIRA cable testing and analysis services....19
1.1 LIRA cable testing....19
1.2 LIRA analysis....20
Wirescan Digital....20
Subscription period and renewal....20
2.2 Termination or suspension of a Wirescan Digital subscription:....21
2.3 Data ownership and data handling:....21
2.4 A contract date and a start of procurement....22
Wirescan Hardware and Software....22
Appendix 3. Wirescan Site Requirements and Method Statement....23
Test Site Requirements and Method Statement for LIRA Data Acquisition....24
Introduction....24
Contact....24
General....25
Test Objectives....25
Test Method....25
Test Data....25
Test Results....25
Test Site Requirements....26
Preparations....26
Cable Preparations....26
Required Conditions....26
Required Available Equipment....26
Method Statement LIRA Data Acquisition....27
Safety Precautions....27

Preparations....28
Connecting to the Cable Under Test....28
Performing Data Acquisition....28
Specifications....29
LIRA Acquire Hardware....29
Software....30

Definitions and Abbreviations

In these General Terms and Conditions, the following names and terms shall have the meaning as interpreted below:

"Confidential Information"	any information and data regardless of form disclosed by one Party or its Affiliates to the other Party, in connection with the Contract, which is marked "Confidential" or similarly marked by the disclosing Party or which is - when disclosed orally or visually - identified as such prior to disclosure and summarized in writing by the disclosing Party within thirty (30) days after such disclosure.
"Contract"	a contract, agreement or a purchase order between Wirescan and the Customer drawn in writing and formally agreed upon/accepted by both parties.
"Contract Date"	a date of Wirescan's written accept of a PO or a date when a Contract document is signed by the last contractual party.
"Customer"	means a party or parties contracting to purchase Products and/or Services from Wirescan
"Delivery Period"	A period between the contract date and receipt of the Products and Services by the Customer agreed upon in the Contract or PO

"IP rights"	Intellectual and Industrial Property rights
"Licence"	a software licence necessary to operate Wirescan products and solutions.
"PO"	purchase order
"Products and Services"	all hardware, software, firmware services, spare parts and related documentation, which Wirescan in writing has agreed to supply under the Contract
"Software"	all software, algorithms developed by Wirescan
"Warranty Service"	maintenance, repair, or replacement of the Products during the warranty period
"Wirescan"	Wirescan AS or any of its affiliates

General

No terms or conditions (contained in a Purchase Order, Contract or otherwise) shall be binding on Wirescan other than those set out herein, unless otherwise expressly agreed in writing by Wirescan.

Formation of the Contract

A Contract between Wirescan and the Customer shall be deemed to have been entered into when the Contract is signed by both parties or upon receipt of a PO from the Customer to which Wirescan has sent a written acceptance within the time limit (if any) fixed by the Customer. A PO must include product or services specification, quantity, requested delivery date and a list of special terms and conditions if different from or not covered by the present document.
The Contract is valid from the Contract Date.
The following (descending) Order of priority shall apply as elements of the Contract for the nature and scope of reciprocal performance:

a. Contract or PO;
b. Special Terms and Conditions or/and Variation List from this document.
c. Wirescan Standard Terms and Conditions.

Wirescan Quotation

A Quotation issued by Wirescan is valid for a period of 60 (sixty) days from the date of issue unless otherwise specified and confirmed by Wirescan in writing. Wirescan is entitled to adjust scope, terms and prices after the expiration of validity.
In case a Quotation specifies special terms, these terms shall prevail over the ones stipulated in this document.

Prices

Standard prices quoted by Wirescan are exclusive VAT and based on Ex Works (INCOTERMS) – Wirescan premises, Norway.
Freight, insurance, and other costs (if any) will be charged as extra costs. Prices quoted apply only to the quantities or Services specified in the Contract.
If between the date of the Contract and the date of the actual delivery, the cost of the Products and/or Services have increased due to change of rates, fees, duties or taxes payable by Wirescan, Wirescan has the right to increase prices accordingly. The Customer shall be notified in writing.
If laws and regulations referenced in the Contract or this document, have been adopted and/or issued after the relevant date of execution of the Contract, and this affects Wirescan's costs, progress or performance, Wirescan may demand a change in the compensation and/or delivery time, reflecting the effect of such change.

Terms of Payment and Default Interest

An invoice from Wirescan shall be paid in full within 30 (thirty) days of the invoice date and in the invoiced currency. Late payments shall be charged at the rate of 5.0 % of an outstanding payment sum per month of delay. Wirescan has the right to withhold delivery of Products, suspend Services or Licences until an outstanding amount is paid in full.
In case of breach of the payment terms by the Customer, Wirescan has the right to terminate the Contract with a 14 (fourteen) days written notice. In case of such termination, the Customer shall compensate Wirescan any costs incurred by Wirescan until and/or directly attributable to such termination with the addition of 15% (fifteen) administrative charge.
Products and services subject to prepayment shall be delivered after the full payment obligation has been carried out by the Customer and the funds received at the Wirescan bank account.

Delivery of Products and Services

Standard delivery terms are based on the Ex Works (INCOTERMS). A delivery period shall run from the Contract Date.
In the event a delay is likely to occur, Wirescan shall notify the Customer of a possibility of a delay and will apply its best effort to avoid or minimize such delay. Wirescan shall however not be liable for any loss or damages the Customer may incur as a consequence of such delay. If a delay is due to a force majeure event or the Customer (such as a delay in payment or delay in any of the Customer's undertakings and obligations under the Contract), Wirescan shall be entitled to an extension of the delivery period.
If the delay is due to the Customer and leads to increased costs on the part of Wirescan, Wirescan shall be entitled to full reimbursement of such increased costs by the Customer. A cost of reimbursement shall be invoiced on standard payment terms as stipulated in Article 6 of this document.
If the Customer fails to accept a delivery, the Customer shall nevertheless make any payment conditional on delivery as if the Product and/or Services have been delivered.
Wirescan shall arrange for the storage of the Product at the risk and cost of the Customer. The Customer shall without undue delay accept the delivery in writing.

Mobilization, demobilization and travel

Mobilization/demobilisation includes travel time and expenses related to travel, accommodation, and sustenance. Mobilization takes place after the Contract or Customer's payment guarantee is received by Wirescan.
Travel, accommodation, and sustenance expenses shall be invoiced at cost plus 15% administration fee. Travel time is invoiced according to the actual number of travel hours. Hourly rates during travel are set to 70% of the standard Wirescan hourly rate for services.

Termination, cancellation, and suspension.

Wirescan has the right to suspend, cancel or terminate delivery of the Products or performance of the Services in case of breach of the agreed Terms and Conditions by the Customer.

The Customer is not entitled to cancel, terminate, or suspend delivery of the Products or execution of the Services under the Contract, with the exception of instances specified in Appendix 2, paragraph 2.2 of this document.

Title and Risk

The Products and/or Services shall be deemed to be sold "Ex Works" (Incoterms) and the risk shall pass accordingly. Title to the Products supplied shall pass to the Customer when Wirescan has received a full payment for said Products.

Intellectual and Industrial Property rights

The Products and/or Services are subject to copyright, trademark and other intellectual and/or industrial property rights and protected by Norwegian and international laws. Such rights vest in Wirescan and the Customer is not allowed to copy, reproduce, do reverse engineering, adapt, publish, distribute, lend and/or transmit through any form the Products and/or Services received. The Customer shall restrain from performing any such activities that may constitute a violation of the intellectual and/or industrial property rights vested in Wirescan.
The software shall only be used in accordance with the purposes and instructions stated in the documentation (manual, descriptions, diagrams, etc.) supplied with the Product. Any other use of the software shall be deemed improper and will constitute a violation of Wirescan's intellectual and/or industrial property rights.
In case Customer infringes Wirescan's intellectual and/or industrial property rights, the Customer shall immediately stop such infringement and indemnify Wirescan for all documented losses sustained as a consequence of the infringement. Wirescan shall demand 100% compensation for documented damage.
Wirescan shall defend any action or claim brought against Customer claiming that the use of the Product infringes any patent or copyright. Wirescan will indemnify the Customer from any cost, damages and fees finally awarded against the Customer attributable to such claim. The Customer undertakes to notify Wirescan promptly in writing of any action or claim.
Wirescan shall not be liable for any costs incurred by the Customer in the defence of such action or claim unless authorised in writing by Wirescan.
Wirescan shall have no liability for any claim based upon:

i. the combination, operation or use of any product not supplied or specified by Wirescan,

ii. the alteration or modification of any Product that was not made by Wirescan when these alterations or modifications have not been performed by Wirescan, or
iii. the failure by the Customer or its end-users to use the most current version of the Product.

This article states the entire liability of Wirescan with respect to infringement of any intellectual and/or industrial property rights by the Product and Wirescan shall have no additional liability with respect to any alleged or proven infringement.

Force Majeur

Wirescan shall not be liable for any delay or failure to perform any of its obligations under the Contract if the delay or failure is due to causes beyond Wirescan 's reasonable control, such as but not limited to: Acts of God, riots, wars, accidents, embargo or requisitions (acts of government), labour disputes or strikes, fire, flood, epidemic or quarantine restrictions, rebellion, insurrection or civil unrest or any other circumstance outside the reasonable control of Wirescan. In case of a force majeure event Wirescan shall promptly notify the Customer in writing.

Warranty

Wirescan Warranty for the Products and Services as stipulated in the Wirescan Certificate of Warranty in Appendix 1 of this document.

Limitation of Liability

Wirescan's total aggregate liability under the Contract shall not exceed 25% of the Contract value. Wirescan shall not be liable for any indirect or consequential damages, such as, but not limited to, loss of profit, loss of revenue and loss of interest. Wirescan is neither liable for any use or interpretation of the analysis or results generated by Products and Services provided by Wirescan nor any actions taken based on such analysis or results.

Exclusions

Except instances expressly stated above and to the extent Wirescan has not acted with gross negligence or wilful misconduct, all other warranty conditions, promises or representations of any nature are hereby excluded. The Customer's sole remedy against Wirescan's breach of its obligations are those stated in this document.

Confidentiality

Both Wirescan and the Customer shall keep Confidential Information, technical and commercial, exchanged between them in connection with the Contract and shall only use such information received for the purpose of implementing this Contract.

The above obligations of confidentiality shall not apply to any information which:

a. was in the receiving Party's possession without an obligation to confidentiality prior to receipt from the disclosing Party;

b. is at the time of disclosure already in the public domain or subsequently becomes available to the public through no breach of this Agreement by the receiving Party and no breach of the corresponding obligations of Permitted Recipients;

c. is lawfully obtained by the receiving Party from a third party without an obligation to keep confidential, provided such third party is not, to the receiving Party's/Parties' knowledge, in breach of any obligation of confidentiality relating to such information;

d. is developed by the receiving Party/Parties independently from any Confidential Information; or

e. is approved for release by written agreement of the disclosing Party.

The party seeking the benefit of such exception shall bear the burden of proving its existence.

The receiving party may disclose the Confidential Information if the receiving party is required to do so by any ruling of a governmental or regulatory authority, a court order, or by mandatory law, provided that, if not prohibited by law, written notice of such ruling or order is given without undue delay to the disclosing party so as to give the disclosing party an opportunity to intervene, and provided further that the receiving party uses reasonable efforts to obtain assurance that the Confidential Information will be treated confidentially.

Changes and Variations

Any changes to the Contract or variations to the agreed scope of work shall be valid if drawn in writing as an Amendment or a Variation Order and agreed upon by Wirescan and the Customer.

Governing Law

This document is governed by the Law of the Kingdom of Norway. Legal venue shall be Oslo District Court (Oslo Tingrett).

Appendix 1. Wirescan Certificate of Warranty

Wirescan warrants that the Products and Services delivered under this Contract in all respect are in accordance with the specifications set out in the Contract and are free from defects (material and workmanship).
This Warranty is the complete, final, and exclusive remedy for the Wirescan Products and Services with respect to the quality of performance and any and all warranties and representations. This warranty sets forth all of Wirescan's responsibilities regarding the Products and Services. Wirescan accepts no liability for any criminal/civil penalties resulting from illegal use of Wirescan's Products.

Warranty period for hardware.

Wirescan warrants that the hardware part of Products will be free from defects in materials and workmanship for a period of 18 (eighteen) months from delivery, or 12 (twelve) months from installation, whichever comes first, provided that the hardware is stored, installed, operated and maintained under normal conditions according to the documentation, specifications, information and training (if any) provided by Wirescan.

Warranty period for software.

LIRA software (other than embedded as a part of the hardware) part of Products and Services has the warranty period of 12 (twelve) months from activation of the software provided that it is operated and maintained under normal conditions according to the documentation, specifications, information and training (if any) provided by Wirescan. The software is deemed to have been activated when a licence key was sent to the Customer by Wirescan.
Warranty period of the software utilized in Wirescan Digital equals a subscription period.

A notice of a defect.

Absence of errors in Products and Services is not warranted. If a defect should occur, Wirescan shall rectify a defect so that its performance is restored according to the agreed specifications. The Customer shall give Wirescan a written notice of a defect, non-conformity or deviation from the

specifications without undue delay after a defect, non-conformity or deviation has been discovered. Such notification shall be given within a valid warranty period.

Defect remediation and Warranty Service for hardware

The defective hardware or its part shall be returned to Wirescan or Wirescan's authorised repair centre at the Customer's cost. Wirescan undertakes to conduct failure analysis and remedy the defect and dispatch the remedied part of the Product to the Customer at Wirescan's cost as soon as possible but maximum 90 (ninety) business days from the date the defect part was received. The remedy may take the form of rectification or replacement as the sole remedy.
The Customer's exclusive remedy under this Warranty or any implied warranty shall be limited to the repair or replacement, at Wirescan's option, of any defective part of the product.
Repairs under this Warranty shall only be made at a Wirescan authorised repair centre. To obtain the Warranty Service, the Customer shall return the Product or pats thereof, together with documentation of the date of the original purchase, nature of defect, and the Customer's return address.

Defect remediation of software

Wirescan undertakes to remedy errors and malfunctions discovered in Wirescan software during the warranty period as stipulated hereunder. The software shall be deemed to have been installed when an activation code is sent to the Customer by Wirescan.
The Customer shall notify Wirescan in writing of a defect discovered in Wirescan software promptly upon its occurrence, but in any event no later than 10 (ten) business days after it has been discovered. The Customer shall provide the following information in each notice:

a. identification of Wirescan software (type, serial number, date of delivery and commissioning) and its location;
b. description of the defect, including the environment, history of events prior to the defect occurred, etc.
c. identification, if any, of the source of the defect;
d. identification of the subassembly, if applicable.

The Customer shall promptly provide any additional information concerning a defect and its occurrence that Wirescan may reasonably request. Wirescan undertakes upon request to provide to the Customer assistance for the identification and analysis of any reproducible problem in Wirescan software. In case of performance-affecting errors or malfunctions in Wirescan software

(affecting the operation and control of Wirescan Products), Wirescan shall promptly upon receipt of a written notice from the Customer, take corrective action to restore satisfactory performance. Wirescan undertakes to promptly forward to the Customer the rectification.
The installation of the LIRA software shall be performed by the Customer. The obligations of Wirescan set forth in this article are valid on condition that:

a. the Customer has acted fully in conformity with these Software Rectification Terms;
b. Wirescan software and corresponding Wirescan hardware products that are in use have been transported, stored , installed and operated fully in accordance with the instructions and specifications of Wirescan;
c. Wirescan software and corresponding hardware products that are in use have not been modified or repaired by any unauthorized party or using any unauthorized parts subassemblies or materials without the prior written consent of Wirescan;
d. Wirescan software has not been used with any freely available software not supplied by Wirescan.

Exclusions and void of Warranty

Except as set forth herein, all other expressed or implied warranties, including those of fitness for any particular purpose and merchantability, are hereby disclaimed and excluded.

a. The Warranty is void if the warranty seal is broken; the Product has been opened by anyone other than a Wirescan authorized repair centre representative; servicing performed or attempted by anyone other than a Wirescan authorized repair centre representative.
b. Wirescan shall not be responsible for loss or damage to the Product incurred while the Product is in transit or is being shipped for repair. The Customer is recommended to insure the Product during the repair period.
c. The Warranty does not extend to cover any damage due to shipping, misuse, negligence, and tampering or improper use on the part of the Customer, his employees or any other person identified with or acting under the responsibility of the Customer.
d. The Warranty does not extend to cover any defects caused by modification of the Product without Wirescan's explicit written approval or by inter-working product not supplied by Wirescan.
e. All analysis and reports generated by Wirescan are the best assessments based on the available data and reported findings but cannot exclude other possible faults/irregularities. Wirescan shall therefore not be responsible for the Customer's use

of the reported data. Wirescan takes no liability for any use or interpretation, or any actions taken based on the results obtained from the system.

f. The Warranty does not extend to cover cases of non-performance or poor quality of results produced by the Wirescan Products and Services which are consequence of the Customer's failure to comply with the Wirescan Sire Requirements and Method Statement as set forth as Attachment 3 to the Wirescan Standard Terms and Conditions.

Appendix 2. Wirescan Terms for Products and Services

LIRA cable testing and analysis services

The terms and conditions of this document apply when services are performed by Wirescan's own personnel or its authorized representatives.

1.1 LIRA cable testing

a. Wirescan requires a 3 (three) weeks' notice of the planned dates of mobilization to prepare and mobilize for measurements. In case of mobilization notice of less than 3 (three) weeks, 25% (twenty five per cent) shall be added to the service and equipment rental rates specified in the Contract;

b. the final confirmation of the date of mobilization shall be given by the Customer no less than 5 (five) business days in advance. In case of late notification or a change of the mobilization date less than 5 (five) business days before the earlier confirmed date an additional 15% may be charged to the service and equipment rental rates specified in the Contract;

c. if services or mobilization/demobilization are performed on a Saturday, Sunday or a public holiday, 100% will be added to the service rate specified in the Contract;

d. if measurements are cancelled due to any reason (including weather) not caused by Wirescan and after Wirescan has mobilized on site, Wirescan is entitled to invoice 35% of the total Contract value plus incurred mobilization/demobilization expenses at cost with 15% administration fee;

e. if measurements are postponed after Wirescan has mobilized on site due to any reason (including weather) not caused by Wirescan and require a new mobilization,

Wirescan is entitled to invoice all incurred mobilization/demobilization expenses at cost with 15% administration fee;

f. if the measurement is cancelled less than 5 (five) business days before the planned mobilization date but before the mobilization, Wirescan is entitled to invoice 10% (ten) of the Contract value plus any cost incurred in connection with preparations plus 15% administration fee;

g. waiting time at site by reasons not caused by Wirescan and additional work is invoiced based on the service and equipment rental rates specified in the Contract.

1.2 LIRA analysis

a. a LIRA analysis report is produced within 15 (fifteen) business days after the testing; shorter delivery time may incur an additional charge;

b. Wirescan shall not be held responsible for any non-performance or poor quality which are consequence of the Customer's failure to comply with the Wirescan site requirements as set forth in the Wirescan Site Requirements and Method Statement in Attachment 3 to the Wirescan Standard Terms and Conditions.

Wirescan Digital

Wirescan Digital is offered on the basis of a subscription.

Subscription period and renewal

a. a minimum subscription period is 12 (twelve) months. Longer term subscriptions with an automatic annual renewal can be established.

b. a subscription can be renewed for 12 (twelve) months or a longer period.

c. a non-renewal notification shall be given no less than 2 (two) months before the expiration date of a current valid subscription period. Data handling shall be according to the terms of 2.3 below.

d. Wirescan has the right to adjust the prices for a renewed subscription period for the same scope up to 5% without prior notification.

e. a Customer can upgrade its subscription with any additional services at any time. A subscription fee shall be adjusted accordingly for the remaining subscription period. A

list of additional services and additional cost shall be drawn and agreed upon in writing.

2.2 Termination or suspension of a Wirescan Digital subscription:

a. a subscription can be terminated at any time with a 3 (three) months notification.
b. in case of a termination, a paid annual fee for the remaining subscription period shall not be reimbursed;
c. all data and functions will be available for the Customer during the notice period until the date data are transferred to the Customer (see 2.3 for data handling);
d. Wirescan has the right to suspend a Wirescan Digital service in case the Customer fails to complete its payment or other obligations as stipulated in the Contract. A service shall be restored within 5 (five) business days after the delayed payment is received in the Wirescan bank account or the obligations are fulfilled by the Customer.

2.3 Data ownership and data handling:

a. all Customer data in Wirescan Digital shall remain the property of the Customer at any time.
b. Wirescan has the right to use the data for the purpose of improving products and services
c. in case a subscription is terminated or not renewed, a Customer shall provide a destination for Wirescan to migrate data to. The destination shall be provided no later than 30 (thirty) days before the expiration of the remaining subscription period.
d. Wirescan shall transfer all data to the Customer during the last 30 (thirty) calendar days of the valid subscription period.
e. if the destination is not provided in time the Customer shall be charged a fee of 10% of an annual subscription agreed in the Contract.
f. Wirescan has the right to withhold transfer of data in case the Customer fails to complete its payment or other obligations under the Contract. All data shall be transferred within 30 (thirty) calendar days after the delayed payment is received in the Wirescan bank account or the obligations are fulfilled by the Customer.
g. in case Wirescan shall be storing the Customers data after the end of service date as a consequence of the delay stipulated in 2.3 c) above or in case the Customer fails to provide a destination for data transfer, a per-day storage fee shall be charged starting from day 1 after the end of subscription period. A per-day storage fee shall be 3% of the annual fee agreed in the Contract.

h. on the Customer's request Wirescan can provide an additional back up of data during the subscription period at a charge of 5% of an annual subscription fee.
i. on the Customer's request Wirescan can provide a short- or long-term storage of the Customer's data after the expiration or termination of the subscription period. The term and price of the service shall be agreed in writing between Wirescan and the Customer at least 30 (thirty) days before the expiration date of the Wirescan Digital service.

2.4 A contract date and a start of procurement

Wirescan requires prepayment covering as a minimum but not limited to the cost of hardware. An invoice is sent as soon as possible after the Contract date with a 30 days payment term. Procurement of hardware shall start when the payment is received in a Wirescan bank account (start of procurement date).

2.5 Wirescan Digital operational period

The Wirescan Digital operational period starts from the date the log-in Wirescan Digital credential information is provided to the Customer and the system is deployed.

Wirescan Hardware and Software

3.1 Wirescan data acquisition hardware

Wirescan data acquisition hardware is calibrated and released to the Customer with the Wirescan Warranty as stipulated in Appendix 1 of the Wirescan Standard Terms and Conditions

3.2 Wirescan software

All Wirescan software is licenced to the Customer through the sale of the Products and Services, according to the Wirescan Warranty as stipulated in Appendix 1 of the Wirescan Standard Terms and Conditions.
All Wirescan software is sold with a 12 (twelve) months licence for 2 users. It is renewable at a fee.
In case of Wirescan Digital subscription all software licences are included in the annual subscription fee. A licence fee covers updates and maintenance. For upgrades, additional services 2.1 e) shall apply.

Customer: Havforskningsinstituttet
Quotation: 26.1508
28/05/2026

Appendix 3. Wirescan Site Requirements and Method Statement

Wirescan AS

Wirescan Standard Terms and Conditions

For LIRA data acquisition

Customer: Havforskningsinstituttet
Quotation: 26.1508
28/05/2026

Author: Morten Huseby
Revision date: 20/03/2023

Revision: E7

Test Site Requirements and Method Statement for LIRA Data Acquisition

Introduction

The document is issued by Wirescan AS (further Wirescan).
This document describes the procedure of a regular LIRA data acquisition together with some important safety aspects which shall be respected.
The procedure assumes that the operator has been through the required training to perform a LIRA data acquisition, i.e. this document does not go into specifics on LIRA projects, cables and other software related details.
Wirescan is not liable for any damages to people and/or equipment as a result of following, or not, this procedure.

Contact

Wirescan contact information:
Morten Huseby
mh@wirescan.no
Tel: +47 957 43 470

General

Test Objectives

The purpose of the test is to gather complex impedance data from the cable under test.

Test Method

The appropriate test method for acquiring the impedance data is by means of the LIRA hardware together with LIRA Acquire software or Wirescan GO! software.

Test Data

The data collected in the test are impedance values. These values are collected over a wide frequency range which varies depending on the type, make, and length of the cable under test.
The complex impedance data is collected in 10 000 discrete frequencies, which forms the basis for further analysis.
There are no fixed criteria to determine the pass or fail of the data collection implemented in the current software. The operator needs to have gone through sufficient training and must have a good understanding of the system in order to determine if the data is ok for post analysis or not.

Test Results

The output of the test is the complex impedance which forms the basis for post analysis.
The post analysis evaluates the condition of the cable by means of several condition indicators:

- **Spot signature**
  Plot of impedance variations as function of length.
- **TDR**
  Plot of impedance variations as function of length. (different calculation algorithm than the spot signature.)
- **Cable characteristics**
  - R, resistance
  - L, inductance
  - C, capacitance
  - Vr, velocity ratio
  - α, attenuation
  - Z_0, Characteristic Impedance
- **Balanced Termination Signature**
  Indicator of far end termination health
- **DeltaG**
  Global ageing indicator

Customer: Havforskningsinstituttet
Quotation: 26.1508
28/05/2026

Test Site Requirements

Preparations

Make sure the test site is available and accessible for testing. I.e. there shall be enough space for the operator and the test equipment to perform the data acquisition without breaching any safety regulations.

Cable Preparations

I case of terminated cable end, make sure that the test equipment can be mounted as close to the cable as possible.
In case of unterminated cable ends, the cable ends shall be prepared for testing. I.e. this implies that there shall be a possibility for mounting regular crocodile clamps to the cable conductor and the screen. The distance between the conductor and the screen shall be as small as possible.
In case of oil filled or impregnated cable, the conductor and screen must be cleaned before testing.
Important:
De-energize the cable and disconnect it from all HV equipment and keep the cable grounded at minimum one end until the data acquisition procedure in Section 3.c! (There is no need to disassemble the cable termination if the conductor and screen is available for crocodile clamps.)

Required Conditions

Make sure the area for testing is as clean and dry as possible, this is required for both inside and outside testing. In case of rain or snow during outside work, a small jointers tent shall be provided. The LIRA Acquire kit and the PC is part of the equipment supplied by the testing company. All other items to be supplied on site by site responsible.

Required Available Equipment

- 110/220 V power supply, minimum two outlets
- LIRA Acquire kit
    - Power supply with international adaptors
    - USB cable
    - Probes, long and short
    - Crocodile clamps
    - Carry case
- PC running the full LIRA Acquire software or the Wirescan GO! software

- Chair, not required
- Small table, not required
- Jointers tent (if outside work)
- Heating if temperature is below 5° C
- Knife
- Pliers
- Cleaning cloths
- Cleaning solvent

Method Statement LIRA Data Acquisition

Safety Precautions

Note: This procedure shall be executed on site before starting any work on the cable end.

Safety Compliance

Make sure that all local safety rules and regulations are obeyed. The LIRA hardware excites a maximum voltage of 5 V_{p-p} and imposes no personnel risk.

Check Personnel

Check that the relevant personnel are on site and ready to support. In most cases relevant personnel is a site supervisor, coupling manager, first aid, and cable technician.
Make sure that relevant contact people and/or telephone numbers are available at all times.

Check Grounding

Note: The cable ends shall not, under any circumstance, be touched without checking for residual voltage, and approved for testing by the site manager, coupling manager and/or electrical safety person.
Check that at least one end of the cable is grounded. This shall preferably be the far end of the cable. The coupling manager is usually responsible for this.
A test for residual voltage shall be performed to make sure the cable is safe.

Preparations

In case of using the full LIRA software, make sure a relevant project and cable is established. Please refer to training material if support is needed.
Connect the LIRA Acquire to the power, and to the PC through the USB interface.

Connect the desired probe to L1 on LIRA Acquire and connect the red and black crocodile clamp to its respective banana plug.
Start the LIRA software and make sure the software has established connection to the LIRA Acquire.

Connecting to the Cable Under Test

Note: Make sure the cable is safe to operate before starting on the following points!
Connection to the cable shall be done by the coupling manager in the following order;

- Connect the crocodile clamps to the desired cable end
- If applicable, remove local grounding
- Perform data acquisition
- If applicable, connect the cable to ground
- Disconnect the crocodile clamps

The same procedure shall be followed when working on cables with more than one phase.

Performing Data Acquisition

Full LIRA Software

In case of using the full LIRA Software the following procedure shall be followed for each conductor/phase to be measured;

1. Start the software
2. Enter measurement mode
3. Select the relevant project
4. Select the relevant cable
5. Select desired maximum frequency
6. Select output port, the same as the probe is connected to
7. Select the output impedance as close to the cable characteristic impedance as possible
8. In case of length mode, input cable length
9. In case of Vr mode, input Vr
10. In case of Manual mode, input both length and Vr
11. Input any measurement notes
12. Press the Acquire button and wait until the acquisition process is finished
13. Check the measurement data to control if the selected maximum frequency is correct

Repeat from step 4 until data for all desired conductors/phases is acquired.

Refer to training manual for troubleshooting.

Wirescan GO! Software

In case of using the LIRA Basic software the following procedure shall be followed for each conductor/phase to be measured;

1. Start the software
2. Enter relevant cable information
3. Press the Acquire button and wait until the acquisition process is finished
4. Check the measurement data quality by inspecting the impedance traces and expected Vr
5. Save data to desired folder with desired file name

Repeat from step 2 until data for all desired conductors/phases is acquired.
Refer to manual for troubleshooting.

Specifications

LIRA Acquire Hardware

Size and weight			
Dimensions (LxWxH)	mm	217x118x28	Without rubber feet
Weight	g	0.853	

I/O ports			
Power supply	DC jack	1	
Network	RJ-45	1	Ethernet
PC connection	USB	1	USB 2.0 type B
BNC		3	

Operational values			
Power supply input	VAC	100 - 240	50/60 Hz
Power supply output	VDC	12	
PoE	V	48	Power over Ethernet
Battery	VDC	5 – 12	Connects to DC jack
Output frequency range	Hz - MHz	1 Hz – 100 MHz	
Output voltage	V_{p-p}	5	Max value

Dynamic range	dB	~70	

Operation conditions			
Temperature range	°C	-20 to + 60	
IP rating	-	IP65	

CE approval	
Standards	• EN 61326-1 (2013), EMC • IEC 60533 (2015), EMC • EN 60945 (2002), vibration • IEC 61892-3, vibration

Software

PC requirement (software currently only available for PC)	
Operating system	Windows 7 or later
RAM	Minimum 4 GB (8 GB recommended)
HDD	Minimum 500 MB
Processor	Intel i7 2.4 MHz, 4 MB cache
Connections	USB, Ethernet
Display	1024x768 or higher

End of document (Wirescan Standard Terms and Conditions with Attachments 1-3)

Transmark Subsea

Date created:	22.11.2021
Status:	Approved
Approved By:	kristine
Date Approved:	23.11.2021

MRB – loVe P#3444- Havforskningen.

TSAS Order No: 32859	Client PO No: 600008475
Contact TSAS: Bjarte Bogevik	**Contact HI: Guosong Zhang**

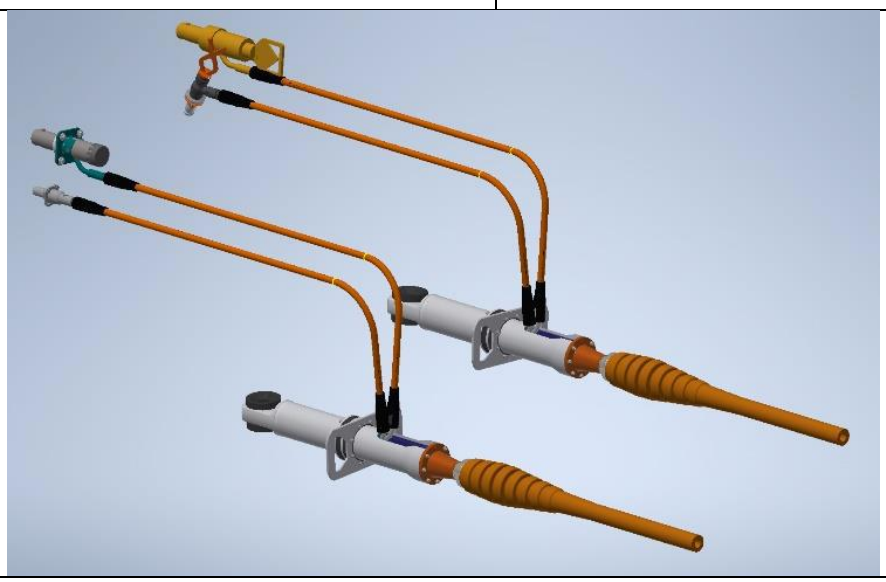

Contents:

1. *scope of supply.*
2. *Main cable doc.*
3. *Jumper Cable doc.*
4. *Material certificate*
5. *Test report.*

1. ***scope of supply:***

Terminering av LoVe kabel (DAJ TSP 10ST20F+FO 18 SMF 350) 500 meter.
Av deler som kunne bli gjenbrukt, ble delene rengjort og gjenbrukt.

Nye deler er designet og ny produsert:

- Insert feedthrough for ACT LoVe 35mm cable, Titanium Grade2
- Fixing ring, Titanium Grade2
- Locking ring for boot, LoVe 35mm cable, Titanium Grade2
- Sleeve inner, for LoVe 35mm cable, S165M
- Cable adapter with tension relief, LoVe 35mm Cable Titanium Grade5
- Adapter for boot, bend relief, LoVe 35mm cable, Titanium Grade2
- Adapterend lid for boot, LoVe 35mm cable, Titanium Grade2
- Bøyes begrenser ny type.
- Murene slange byttet.
- Testet Elektrisk og Fiber optisk.

2. *MAIN CABLE DOC.*

TSAS Part No: 219428
TSAS Serial No.: 29526

Produkt no.	Description	QTY	Unit	Serial/Heat No/ PO No.	Material
219428	**Cable Assy**	**-**	**-**	**-**	**--**
103732	Bootseal ID Ø3,9 / AWG 16 - Naturgummi	4	Stk	44-2020	RUBBER
103733	Bootseal ID Ø3,9 / Blind	4	Stk	22.06.22	RUBBER
103786	Pin awg 16 for 1-2 Splitter	4	Stk	48026	Messing
103787	Adapter for 1-2 splitter	4	Stk	48026	Messing
104469	Protection pipe, main cable termination - Metas	2	Stk	Re-Use	Titan gr.2
104473	Rubber bushing for strain relief, main cable - Metas	2	Stk	Re-Use	NBR 60
104822	Bootseal power cond. 2,06	4	Stk	TSAS	RUBBER
105510	Bootseal for tower Ø10 and cable Ø8,6		Stk	05.01.21	RUBBER
106233	Inline splice insulator, Love 35mm cable	4	Stk	2.2	PEEK
106234	Inline splice crimp terminal, Love 35mm	4	Stk	21208131	Copper
212148	Washer M8 DIN 125	14	Stk	Re-use	Tit.Gr 2
213126	Screw M10 x 25 DIN 7991	20	Stk	Re-Use	Ti. Gr 2
213161	Screw M8 x 50 DIN 912	14	Stk	Re-use	TI. Gr.5
106232	**FO termination assy,**	-	-	-	-
100319	O-ring 17,00 x 1,50	4	Stk	49409	NBR 70
100527	Plug for MK II Fill Port	4	Stk	20192624	Titan gr.2
100600	O-ring 6,20 x 1,00	8	Stk	60689155	NBR 70
104442	Cradle FO termination, ACT, Metas	2	Stk	Re-Use	POM
104443	FO termination end wall 2, ACT, Metas	2	Stk	Re-Use	Titan gr.2
104444	FO termination end wall 1, ACT, Metas	2	Stk	Re-Use	Titan gr.2
106227	FO adapter for end wall, ACT, LoVe	2	Stk	Re-Use	Titan gr.2
211740	Streamer skin - O.D. 72mm, 4mm wall	2	Stk	Re-use	PUR
213090	Fiber Optical Penetrator 8xSMF+8xMM,	2	Stk	Re-Use	Titan gr.2
213120	O-ring 9,19 x 2,62	2	Stk	45072	NBR 70

Produkt no.	Description	QTY	Unit	Serial/Heat No/ PO No.	Material
213123	Screw M6 x 20 DIN 912	4	Stk	Re-Use	Ti. Gr 2
106194	**Node 1 ACT assy, LOVE 35mm cable**	-	-	-	-
100527	Plug for MK II Fill Port.	6	Stk	20192624	Titan gr.2
100600	O-ring 6,20 x 1,00	12	Stk	60689155	NBR 70
103983	Screw for Splitbox M10,	12	Stk	20181244	Ti Gr.2
104365-20,1	Nut M35x1,5 Hang-off 19,5 mm Cable	2	Stk	48178	JM7
104366-20,1	Washer No1 Hang off 19,5 mm cable	2	Stk	48178	POM
104367-20,0	Gland Hang-off 19,5 mm Cable	2	Stk	49409	RUBBER
104368-20,1	Washer No 2 Hang-off 19,5 mm Cable	2	Stk	48178	AISI 316
104446	End lid 1, ACT114, Metas	2	Stk	Re-Use	Ti Gr.2
104448	Tube L400, ACT114, Metas	2	Stk	Re-Use	Ti Gr.2
104467	POM filler for ACT - Metas	2	Stk	Re-Use	POM
106200	End lid 2, ACT114, LoVe 35mm cable	2	Stk	Re-Use	Ti Gr.2
106206	Adapter End lid 2 for boot, LoVe 35mm	2	Stk	20150476	Ti Gr.2
106212	Fixing ring	2	Stk	20141866	Ti Gr.2
106213	Support cradle ø100x150,	2	Stk	Re-Use	POM
106231	Screw M5 x 30 DIN912	6	Stk	Re-Use	Titan Gr.2
106245	Screw M4 x 20 DIN912	8	Stk	Re-Use	Ti Gr.2
211849	O-ring 38,00 x 2,00	4	Stk	59684338/09.2019	NBR 70
212567	O-ring 40,00 x 2,00	8	Stk	47857	NBR 70
213119	O-ring 98 x 3	8	Stk	45072	NBR 70
213123	Screw M6 x 20 DIN 912	4	Stk	Re-Use	Ti. Gr 2
213124	Screw M8 x 20 DIN 912	4	Stk	Re-Use	Ti. Gr 2
106195	**Tension relief for main cable,**	**2**	**-**	**-**	**-**
100527	Plug for MK II Fill Port.	4	stk	20192624	Titan gr.2
100600	O-ring 6,20 x 1,00	8	stk	60689155	NBR 70
106196	Cable adapter with tension relief,	2	stk	20141574	Titan gr.5
106197	Sleeve, inner, for cable termination	2	stk	111226	S165M
106199	Adapter for boot, for bend relief,	2	stk	1145	Titan gr.2
106212	Fixing ring	2	stk	20141866	Titan gr.2

Produkt no.	Description	QTY	Unit	Serial/Heat No/ PO No.	Material
106231	Screw M5 x 30 DIN912	6	stk	49394	Titan gr.2
106242	Washer POM for 35 mm	2	stk	49410	POM
106243	Gland for 35 mm Cable	2	stk	49409	Rubber
106244	Nut M45x1,5 for 35 mm Cable	2	stk	2.2	JM7
211849	O-ring 38,00 x 2,00	4	stk	59684338/09.2019	NBR 70
212149	Screw M5 x 20 DIN 912	8	stk	Re-use	Titan gr.2
213121	O-ring 63 x 2	2	stk	45072	NBR 70
106225	**BSR ID 37mm**	**-**	**-**	**-**	**-**
106198	Nut BSR Ø37	2	stk	20208528	Titan gr.5
214641	Armor ring	2	stk	434702	Duplex2205
214642	Spacer for ø10 bolt	16	srk	T7RN	Duplex2205

Transmark Subsea		Assembly Check List	
Document no.: 2012-10003-v1	Rev.no.: 1.0	Document Type/ no.: Forms and Templates	Page 1 of 1

Work Order No.	**3444-9**	TSAS S/N:	**29526**
Sales Order No	32859	TSAS P/N:	106236
Client P/N	600008475	Client S/N:	NA
TAG A:	**P/N 21948**	TAG B:	
TAG C:	**TSAS 29526**		

Step. no	DESCRIPTION	Sign. Workshop	Sign. QA/QC	Date
5.1	Verify all released documents	FAJ		20/3-23
5.2	Inspection of hardware	FAJ		20/3-23
5.3	Cut and prepare hose to correct specified length	N/A		—
5.4	Install Bend restrictor if applicable	FAJ		20/3-23
5.5	Fitting installation	N/A		—
5.6	Tension test	N/A		—
5.7	Leakage test nitrogen/helium	N/A		—
5.8	Cut of wires to correct length	FAJ		24/3-23
5.9	Bundle the wires	N/A		—
5.10	Install wire bundle	N/A		—
5.11	Protection of conductors through fitting	FAJ	2•	24/3-23
5.12	Electrical termination (both ends)	FAJ		24/3-23
5.13	IR and Continuity check (IR>1GΩ)	FAJ		27/3-23
5.14	Verify Cable over length	FAJ		24/3-23
5.15	Assemble Mechanical and connector parts	FAJ		28-29/3-23
5.16	Leakage test nitrogen	N/A		—
5.17	Installation of Bend Restrictor.	N/A		—
5.18	Filling of silicon oil	FAJ		28+29/3-23
5.19	Completed assembly inspection	FAJ		30/3-23
5.20	Marking	FAJ		30/3-23

Sign off.		
Workshop	Date: 30/3-23	Sign.: F. A Jacobsen
TSAS QC (Workshop manager)	Date:	Sign.:

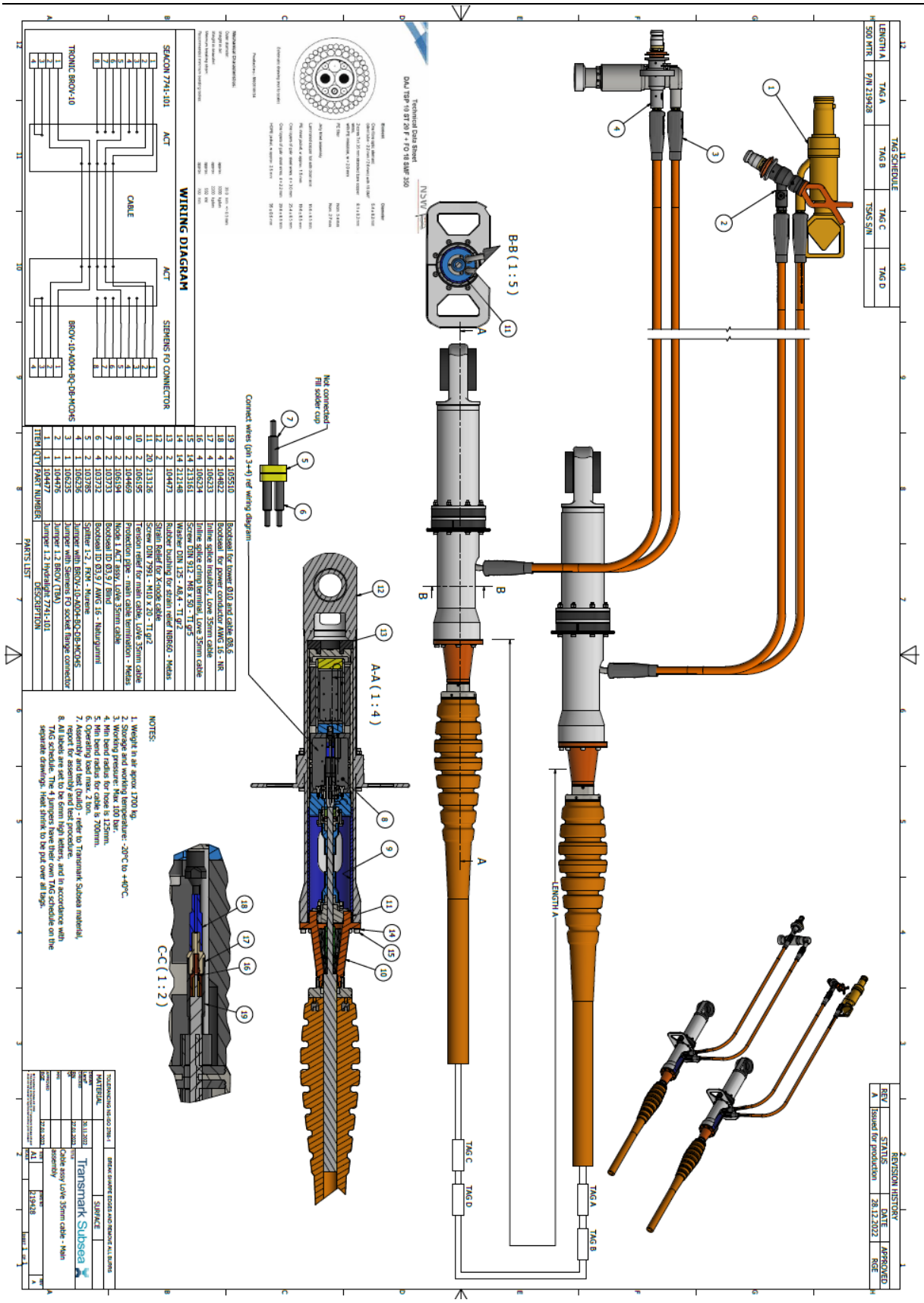
TAG SCHEDULE
LENGTH A
TAG A
TAG B
TAG C
TAG D
500 MTR
P/N 219428
TS45 S/N
REVISION HISTORY
REV
STATUS
DATE
APPROVED
A
Issued for production
28.12.2022
RGE
B-B (1 : 5)
A-A (1 : 4)
C-C (1 : 2)
Technical Data Sheet
DAU TSP-10 ST 20 F - FO 18 SMF 350
WIRING DIAGRAM
SEACON 7741-101
ACT
SIEMENS FO CONNECTOR
CABLE
TRONIC BROV-10
BROV-10-M004-BQ-D8-MCD45
Not connected
Fill solder cup
Connect wires (pin 3+4) ref wiring diagram
ITEM QTY PART NUMBER DESCRIPTION
PARTS LIST
NOTES:
1. Weight in air aprox 1700 kg.
2. Storage and operating temperature: -20°C to +40°C.
3. Working pressure: Max 100 bar.
4. Min bend radius for hose is 125mm.
5. Min bend radius for cable is 700mm.
6. Operating load max. 2 ton.
7. Assembly and test (build) - refer to Transmark Subsea material, report for assembly and test procedure.
8. All labels are to be produced and fix in accordance with TAG schedule. The 4 jumpers have their own TAG schedule on the separate drawings. Heat shrink to be put over all tags.
TOLERANCING ISO 2768-1
BREAK SHARPE EDGES AND REMOVE ALL BURRS
MATERIAL
SURFACE
Transmark Subsea
Cable assy LoVe 35mm cable - Main assembly
219428
A1
A

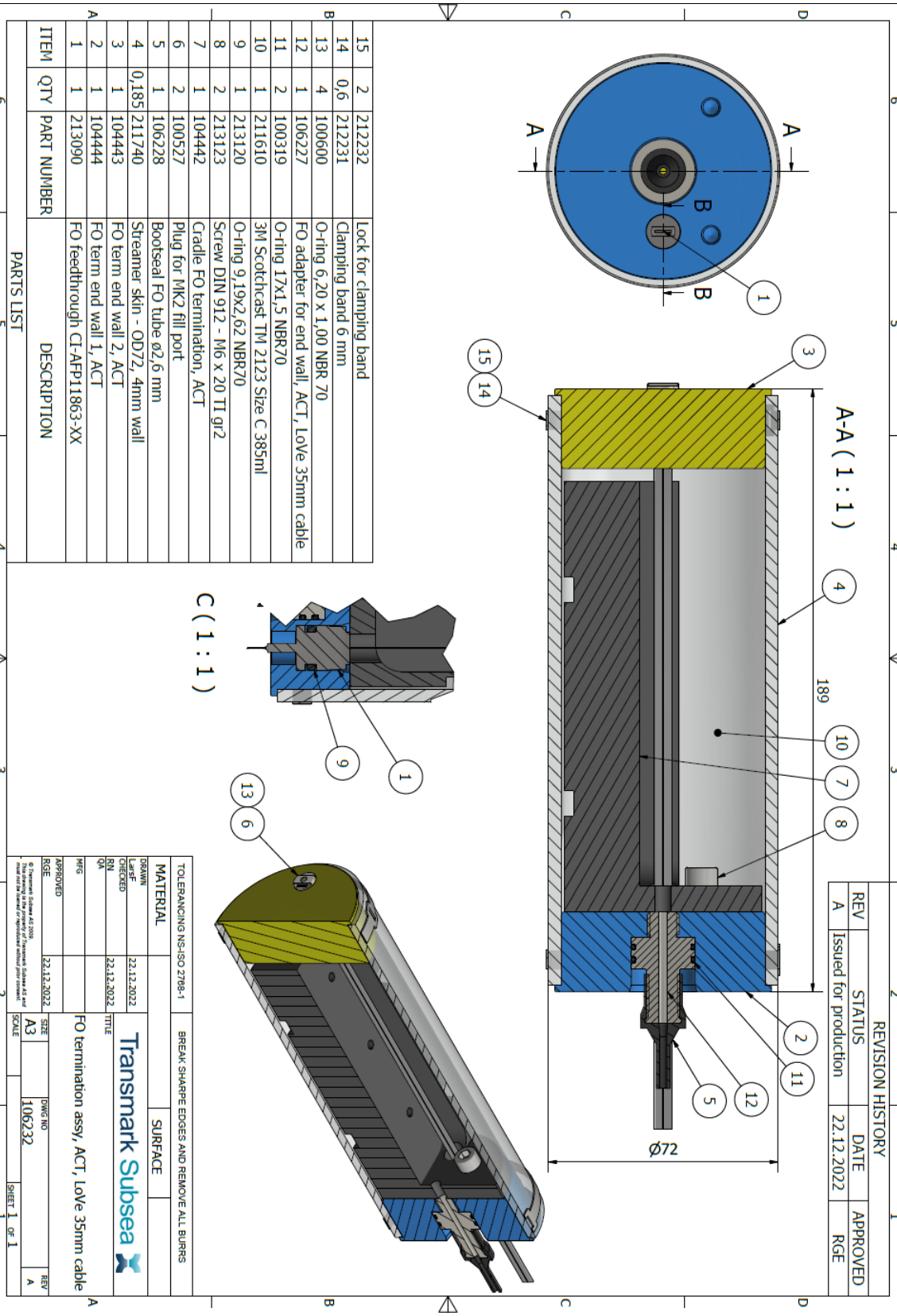

ITEM	QTY	PART NUMBER	DESCRIPTION
15	2	212232	Lock for clamping band
14	0,6	212231	Clamping band 6 mm
13	4	100600	O-ring 6,20 x 1,00 NBR 70
12	1	106227	FO adapter for end wall, ACT, LoVe 35mm cable
11	2	100319	O-ring 17x1,5 NBR70
10	1	211610	3M Scotchcast TM 2123 Size C 385ml
9	1	213120	O-ring 9,19x2,62 NBR70
8	2	213123	Screw DIN 912 - M6 x 20 TI gr2
7	1	104442	Cradle FO termination, ACT
6	2	100527	Plug for MK2 fill port
5	1	106228	Bootseal FO tube ø2,6 mm
4	0,185	211740	Streamer skin - OD72, 4mm wall
3	1	104443	FO term end wall 2, ACT
2	1	104444	FO term end wall 1, ACT
1	1	213090	FO feedthrough CI-AFP11863-XX

PARTS LIST

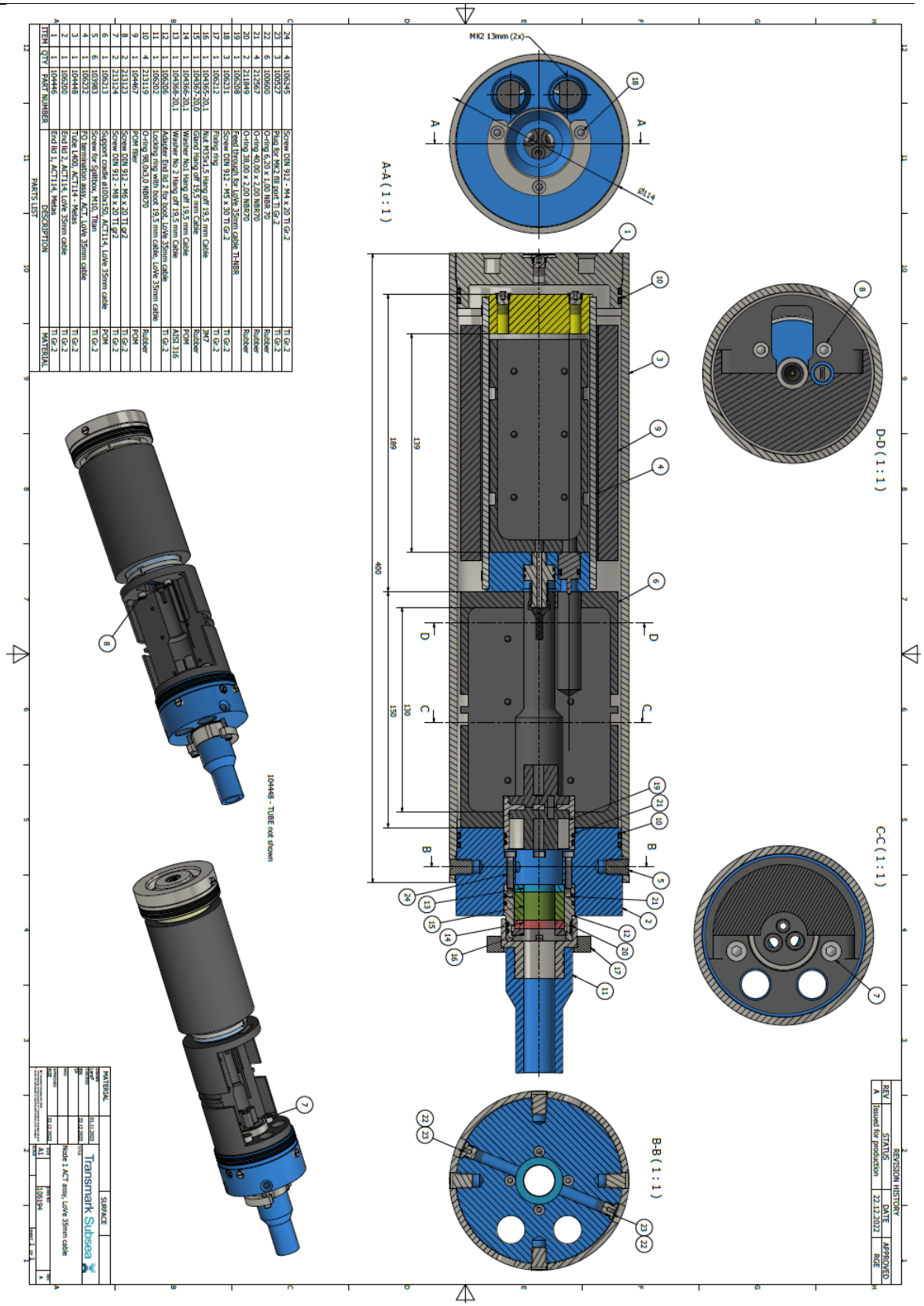
A-A (1:1)
B-B (1:1)
C-C (1:1)
D-D (1:1)
M12 13mm (2x)
Ø114
400
189
139
150
130
104449 - TUBE not shown
REVISION HISTORY
REV
STATUS
DATE
APPROVED
A
Issued for production
22.12.2022
RGE
PARTS LIST
ITEM QTY PART NUMBER DESCRIPTION MATERIAL
24 4 106245 Screw DIN 912 - M4 x 30 Ti Gr.2 Ti Gr.2
23 3 100527 Plug for MK2 fill port Ti Gr.2 Ti Gr.2
22 6 100600 O-ring 6.20 x 1.00 NBR 70 Rubber
21 4 212567 O-ring 40.00 x 2.00 NBR70 Rubber
20 2 211849 O-ring 38.00 x 2.00 NBR70 Rubber
19 1 106208 Feed through for LoVe 35mm cable Ti-NBR Rubber
18 3 106231 Screw DIN 912 - M5 x 30 Ti Gr.2 Ti Gr.2
17 1 106212 Flang ring Ti Gr.2
16 1 104365-201.1 Nut M35x1.5 Hang off 19.5 mm Cable JM7
15 1 104367-201.0 Gland Hang off 19.5 mm Cable Rubber
14 1 104366-201.1 Washer No.1 Hang off 19.5 mm Cable POM
13 1 104368-201.1 Washer No.2 Hang off 19.5 mm Cable AISI 316
12 1 106206 Adapter End Id 3 Ø30x30 LoVe 35mm cable Ti Gr.2
11 1 106202 Locking ring with boot 19.5 mm cable, LoVe 35mm cable Rubber
10 4 213119 O-ring 98.0x2.0 NBR70 Rubber
9 1 104467 POM filter POM
8 2 213123 Screw DIN 912 - M6 x 20 Ti gr2 Ti Gr.2
7 2 213124 Screw DIN 912 - M8 x 20 Ti gr2 Ti Gr.2
6 1 106213 Support cradle ø100x150, ACT114, LoVe 35mm cable POM
5 6 103983 Screw for Splitbox, M10, Titan Ti Gr.2
4 1 106232 FO termination assy, ACT, LoVe 35mm cable Ti Gr.2
3 1 104448 Tube L400, ACT114 - Medas Ti Gr.2
2 1 106200 End Id 2, ACT114, LoVe 35mm cable Ti Gr.2
1 1 104445 End Id 1, ACT114, Medas Ti Gr.2
MATERIAL
SURFACE
Transmark Subsea
Node 1 ACT assy, LoVe 35mm cable
A1
106194
Sheet 1 of 1

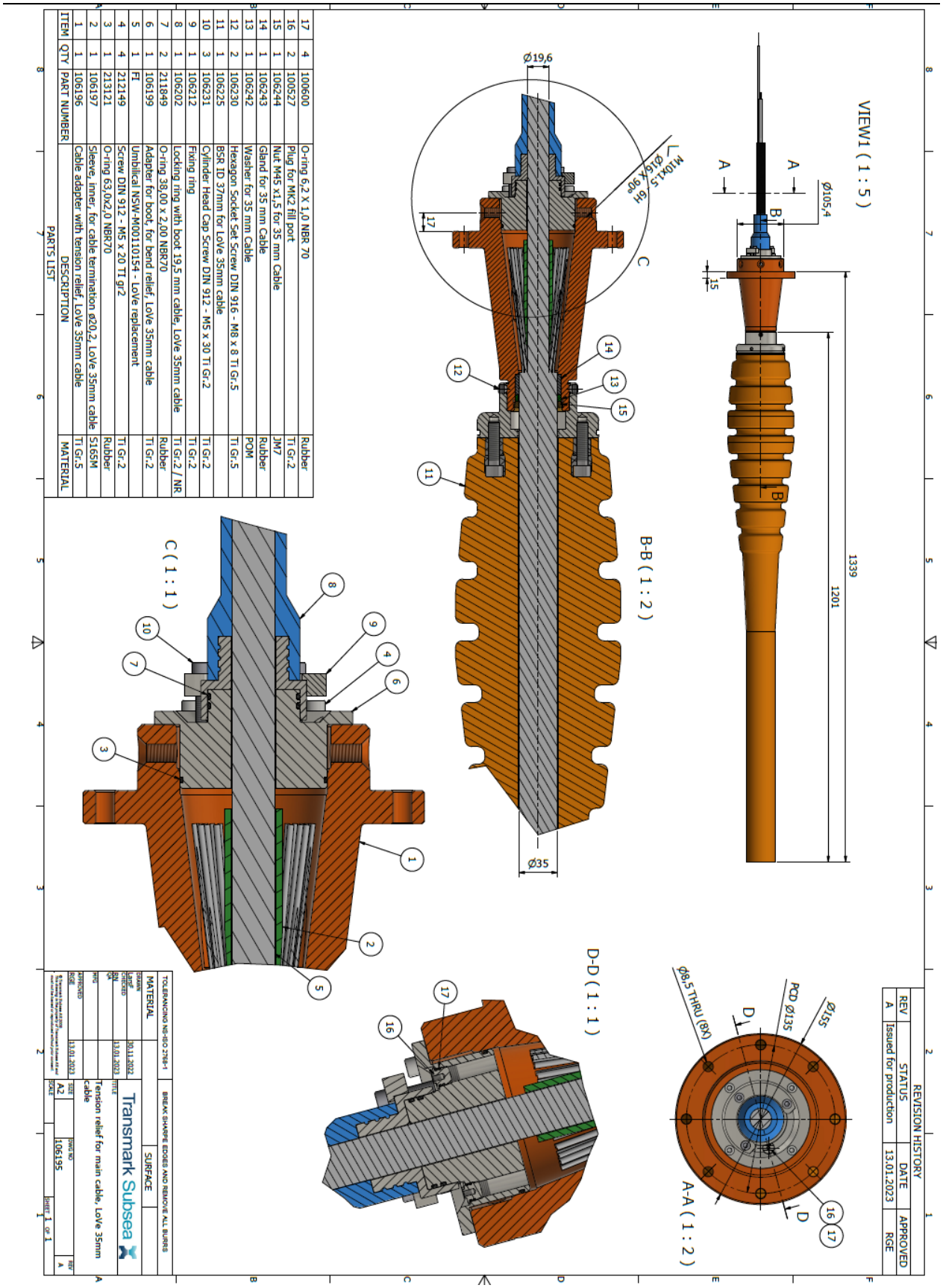

ITEM	QTY	PART NUMBER	DESCRIPTION	MATERIAL
17	4	100600	O-ring 6,2 X 1,0 NBR 70	Rubber
16	2	100527	Plug for MK2 fill port	Ti Gr.2
15	1	106244	Nut M45 x1,5 for 35 mm Cable	JM7
14	1	106243	Gland for 35 mm Cable	Rubber
13	1	106242	Washer for 35 mm Cable	POM
12	2	106230	Hexagon Socket Set Screw DIN 916 - M8 x 8 Ti Gr.5	Ti Gr.5
11	1	106225	BSR ID 37mm for LoVe 35mm cable	
10	3	106231	Cylinder Head Cap Screw DIN 912 - M5 x 30 Ti Gr.2	Ti Gr.2
9	1	106212	Fixing ring	Ti Gr.2
8	1	106202	Locking ring with boot 19,5 mm cable, LoVe 35mm cable	Ti Gr.2 / NR
7	2	211849	O-ring 38,00 x 2,00 NBR70	Rubber
6	1	106199	Adapter for boot, for bend relief, LoVe 35mm cable	Ti Gr.2
5	1	FL	Umbilical NSW-M00110154 - LoVe replacement	
4	4	212149	Screw DIN 912 - M5 x 20 Ti gr2	Ti Gr.2
3	1	213121	O-ring 63,0x2,0 NBR70	Rubber
2	1	106197	Sleeve, inner, for cable termination ø20,2, LoVe 35mm cable	S165M
1	1	106196	Cable adapter with tension relief, LoVe 35mm cable	Ti Gr.5
PARTS LIST				

3. JUMPER CABLE DOC.

TSAS Part No: 104477
TSAS Serial No.: 02812

	Description	QTY	Unit	Serial/Heat No.	Material
210555	Bendrestrictor Murene for MK2 13 MM	2	stk	SK36204401	Rubber
210845	Hose, Murene Transmark Subsea Hose , ID13/OD25	3	m	T0010613	Murene
211059	**Fitting Assembly Murene, MK2 13mm,**	**1**	**stk**		
100362-01	Insert Murene MK2 fittings 13mm,	1	stk	20170741	Titan gr2
100363-01	Nut M25x1,5 for fittings Murene MK2	1	stk	202101229	Titan gr2
100364-01	Crimp Sleeve for fittings Murene MK2	1	stk	20213299	Titan gr2
210712	O-ring 15,00 x 1,50	1	stk	31369665	NBR 70
210903	O-ring 19,00 x 1,50	1	stk	59966454	NBR 70
211062	**Bend 90° Assembly Murene, 13mm**	**1**	**stk**		
100363-01	Nut M25x1,5 for fittings Murene MK2 13mm	1	stk	202101229	Titan gr2
100364-01	Crimp Sleeve for fittings Murene MK2 13mm	1	stk	20213299	Titan gr2
103754-01	Bend 90° insert Murene, 13mm MK2	1	stk	20141839	Titan gr2
210712	O-ring 15,00 x 1,50	1	stk	59966454	NBR 70
210903	O-ring 19,00 x 1,50	1	stk	6055864385	NBR 70

Transmark Subsea		Assembly Check List	
Document no.: 2012-10003-v1	Rev.no.: 1.0	Document Type/ no.: Forms and Templates	Page 4 of 4

Work Order No.	**3444-6**	TSAS S/N:	**02812**
Sales Order No	32859	TSAS P/N:	104477
Client P/N	600008475	Client S/N:	NA
TAG A:	**TSAS P/N 104477**	TAG B:	**TSAS S/N**
TAG C:	**SDU**		

Step. no	DESCRIPTION	Sign. Workshop	Sign. QA/QC	Date
5.1	Verify all released documents	CS	AD	21.03.23
5.2	Inspection of hardware	CS	AD	"
5.3	Cut and prepare hose to correct specified length	CS	AD	"
5.4	Install Bend restrictor if applicable	CS	AD	"
5.5	Fitting installation	CS	AD	"
5.6	Tension test	CS	AD	"
5.7	Leakage test nitrogen/helium	CS	AD	22.03.23
5.8	Cut of wires to correct length			
5.9	Bundle the wires			
5.10	Install wire bundle			
5.11	Protection of conductors through fitting			
5.12	Electrical termination (both ends)			
5.13	IR and Continuity check (IR>1GΩ)			
5.14	Verify Cable over length	N/A		
5.15	Assemble Mechanical and connector parts			
5.16	Leakage test nitrogen			
5.17	Installation of Bend Restrictor.			
5.18	Filling of silicon oil			
5.19	Completed assembly inspection			
5.20	Marking			

Sign off.		
Workshop	Date: 22 MARS 2023	Sign.:
TSAS QC (Workshop manager)	Date:	Sign.:

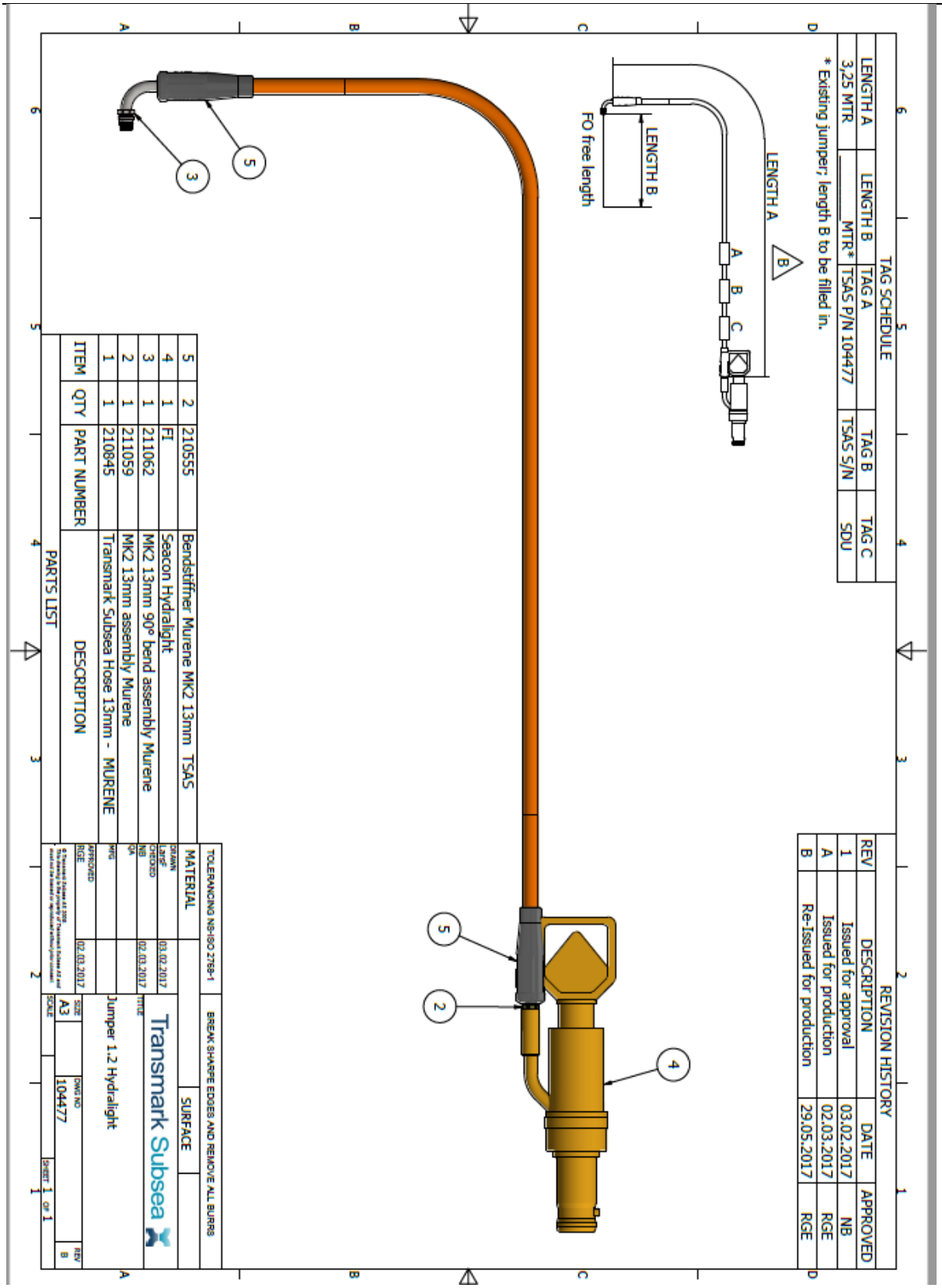
TAG SCHEDULE
LENGTH A
LENGTH B
TAG A
TAG B
TAG C
3,25 MTR
MTR*
TSAS P/N 104477
TSAS S/N
SDU
* Existing jumper; length B to be filled in.
LENGTH A
LENGTH B
FO free length
REVISION HISTORY
REV
DESCRIPTION
DATE
APPROVED
1
Issued for approval
03.02.2017
NB
A
Issued for production
02.03.2017
RGE
B
Re-Issued for production
29.05.2017
RGE
5
2
210555
Bendstiffner Murene MK2 13mm TSAS
4
1
FI
Seacon Hydralight
3
1
211062
MK2 13mm 90° bend assembly Murene
2
1
211059
MK2 13mm assembly Murene
1
1
210845
Transmark Subsea Hose 13mm - MURENE
ITEM
QTY
PART NUMBER
DESCRIPTION
PARTS LIST
TOLERANCING NS-ISO 2768-1
BREAK SHARPE EDGES AND REMOVE ALL BURRS
MATERIAL
SURFACE
DRAWN
LarsF
03.02.2017
CHECKED
NB
02.03.2017
QA
MFG
APPROVED
RGE
02.03.2017
Transmark Subsea
TITLE
Jumper 1.2 Hydralight
SIZE
A3
SCALE
DWG NO
104477
REV
B
SHEET 1 OF 1

TSAS Part No: 104476
TSAS Serial No.: 02811

	Description	QTY	Unit	Serial/Heat No.	Material
210555	Bendrestrictor Murene for MK2 13 MM	2	stk	SK36204401	Rubber
210845	Hose, Murene Transmark Subsea Hose , ID13/OD25	3	m	T0010613	Murene
211059	**Fitting Assembly Murene, MK2 13mm,**	**1**	**stk**		
100362-01	Insert Murene MK2 fittings 13mm,	1	stk	20170741	Titan gr2
100363-01	Nut M25x1,5 for fittings Murene MK2	1	stk	202101229	Titan gr2
100364-01	Crimp Sleeve for fittings Murene MK2	1	stk	20213299	Titan gr2
210712	O-ring 15,00 x 1,50	1	stk	31369665	NBR 70
210903	O-ring 19,00 x 1,50	1	stk	59966454	NBR 70
211062	**Bend 90° Assembly Murene, 13mm**	**1**	**stk**		
100363-01	Nut M25x1,5 for fittings Murene MK2 13mm	1	stk	202101229	Titan gr2
100364-01	Crimp Sleeve for fittings Murene MK2 13mm	1	stk	20213299	Titan gr2
103754-01	Bend 90° insert Murene, 13mm MK2	1	stk	20141839	Titan gr2
210712	O-ring 15,00 x 1,50	1	stk	59966454	NBR 70
210903	O-ring 19,00 x 1,50	1	stk	6055864385	NBR 70

Transmark Subsea		Assembly Check List	
Document no.: 2012-10003-v1	Rev.no.: 1.0	Document Type/ no.: Forms and Templates	Page 3 of 4

Work Order No.	**3444-6**	TSAS S/N:	**02811**
Sales Order No	32859	TSAS P/N:	104476
Client P/N	600008475	Client S/N:	NA
TAG A:	**TSAS P/N 104476**	TAG B:	**TSAS S/N**
TAG C:	**SDU**		

Step. no	DESCRIPTION	Sign. Workshop	Sign. QA/QC	Date
5.1	Verify all released documents	ES	[illegible]	21.03.23
5.2	Inspection of hardware	ES	[illegible]	"
5.3	Cut and prepare hose to correct specified length	ES	[illegible]	"
5.4	Install Bend restrictor if applicable	ES	[illegible]	"
5.5	Fitting installation	ES	[illegible]	"
5.6	Tension test	ES	[illegible]	"
5.7	Leakage test nitrogen/helium	ES	[illegible]	22.03.23
5.8	Cut of wires to correct length	ES	[illegible]	"
5.9	Bundle the wires	ES	[illegible]	"
5.10	Install wire bundle	ES	[illegible]	"
5.11	Protection of conductors through fitting			
5.12	Electrical termination (both ends)			
5.13	IR and Continuity check (IR>1GΩ)			
5.14	Verify Cable over length			
5.15	Assemble Mechanical and connector parts	NA	NA	
5.16	Leakage test nitrogen			
5.17	Installation of Bend Restrictor.			
5.18	Filling of silicon oil			
5.19	Completed assembly inspection			
5.20	Marking			

Sign off.		
Workshop	Date: 22 MARS 2023	Sign.:
TSAS QC (Workshop manager)	Date:	Sign.:

Transmark Subsea

TAG SCHEDULE				
LENGTH A	LENGTH B	TAG A	TAG B	TAG C
_____ MTR*	_____ MTR*	TSAS P/N 104476	TSAS S/N	SDU

* Existing jumper; length A and B to be filled in.

REVISION HISTORY			
REV	DESCRIPTION	DATE	APPROVED
1	Issued for approval	03.02.2017	NB
A	Issued for production	02.03.2017	RGE

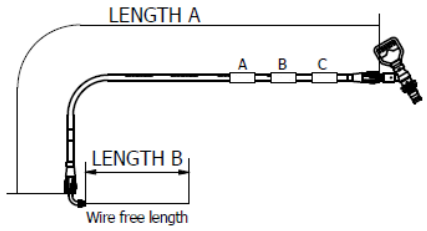

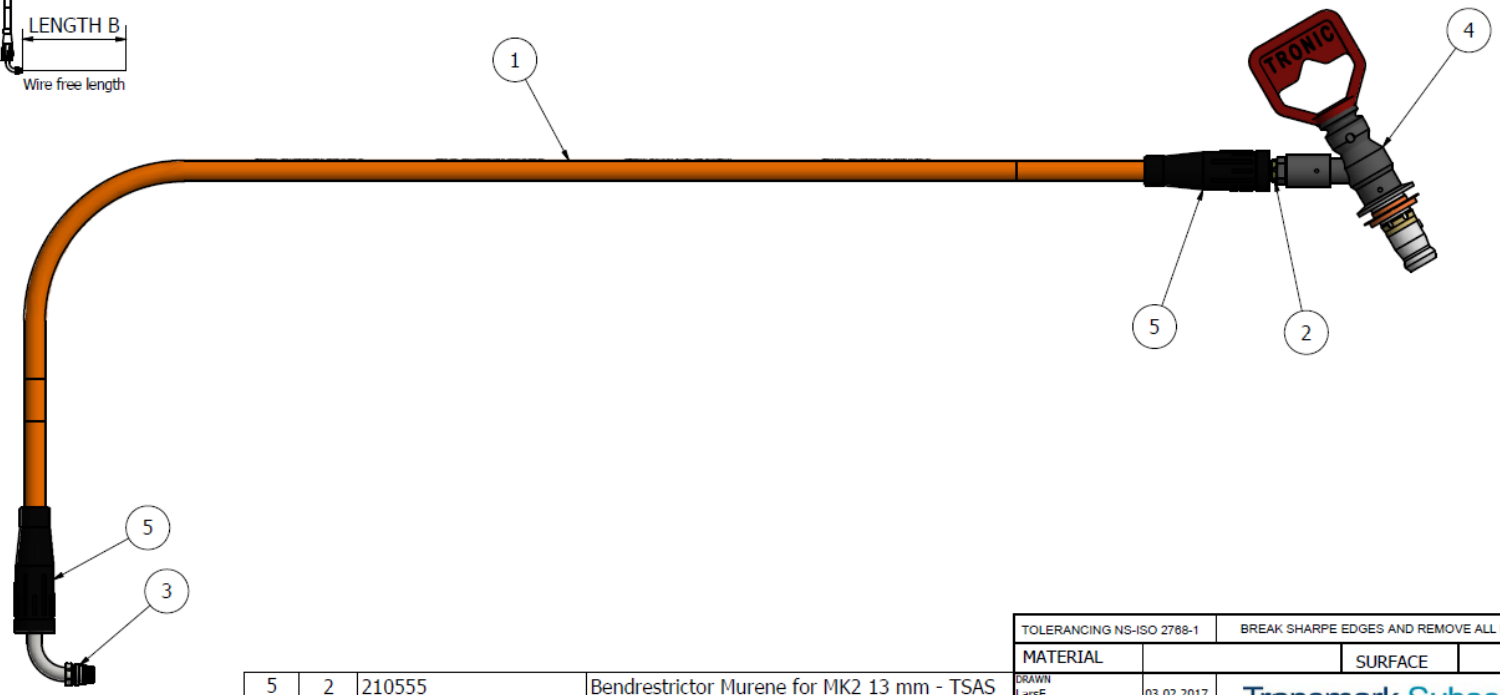

ITEM	QTY	PART NUMBER	DESCRIPTION
5	2	210555	Bendrestrictor Murene for MK2 13 mm - TSAS
4	1	FI	BROV-10-A003-BQ-DB-MC04S
3	1	211062	MK2 13mm 90° bend assembly Murene
2	1	211059	MK2 13mm assembly Murene
1	1	210845	Transmark Subsea Hose 13mm - MURENE

PARTS LIST

TOLERANCING NS-ISO 2768-1 | BREAK SHARPE EDGES AND REMOVE ALL BURRS

MATERIAL | SURFACE

DRAWN	LarsF	03.02.2017
CHECKED	NB	02.03.2017
QA		
MFG		
APPROVED	RGE	02.03.2017

Transmark Subsea

TITLE: Jumper 1.2 BROV

SIZE: A3 | DWG NO: 104476 | REV: A

SCALE | SHEET 1 OF 1

© Transmark Subsea AS 2009
This drawing is the property of Transmark Subsea AS and must not be loaned or reproduced without prior consent.

TSAS Part No: 106236
TSAS Serial No.: 02809

	Description	QTY	Unit	Serial/Heat No.	Material
106074	Bootseal Tronic CP-09260-00 for 4 way 12-16AWG	4	stk	09-1144103	Nitril
210555	Bendrestrictor Murene for MK2 13 MM	2	stk	SK36204401	Rubber
210845	Hose, Murene Transmark Subsea Hose , ID13/OD25	3	m	T0010613	Murene
211059	**Fitting Assembly Murene, MK2 13mm,**	**1**	**stk**		
100362-01	Insert Murene MK2 fittings 13mm,	1	stk	20170741	Titan gr2
100363-01	Nut M25x1,5 for fittings Murene MK2	1	stk	202101229	Titan gr2
100364-01	Crimp Sleeve for fittings Murene MK2	1	stk	20213299	Titan gr2
210712	O-ring 15,00 x 1,50	1	stk	31369665	NBR 70
210903	O-ring 19,00 x 1,50	1	stk	59966454	NBR 70
211062	**Bend 90° Assembly Murene, 13mm**	**1**	**stk**		
100363-01	Nut M25x1,5 for fittings Murene MK2 13mm	1	stk	202101229	Titan gr2
100364-01	Crimp Sleeve for fittings Murene MK2 13mm	1	stk	20213299	Titan gr2
103754-01	Bend 90° insert Murene, 13mm MK2	1	stk	20141839	Titan gr2
210712	O-ring 15,00 x 1,50	1	stk	59966454	NBR 70
210903	O-ring 19,00 x 1,50	1	stk	6055864385	NBR 70

Transmark Subsea		Assembly Check List	
Document no.: 2012-10003-v1	Rev.no.: 1.0	Document Type/ no.: Forms and Templates	Page 1 of 4

Work Order No.	**3444-6**	TSAS S/N:	**02809**
Sales Order No	32859	TSAS P/N:	106236
Client P/N	600008475	Client S/N:	NA
TAG A:	**TSAS P/N 106236**	TAG B:	**TSAS S/N**
TAG C:	**X-NODE**		

Step. no	DESCRIPTION	Sign. Workshop	Sign. QA/QC	Date
5.1	Verify all released documents	ES		21.03.23
5.2	Inspection of hardware	ES		"
5.3	Cut and prepare hose to correct specified length	ES		"
5.4	Install Bend restrictor if applicable	ES		"
5.5	Fitting installation	ES		"
5.6	Tension test	ES		"
5.7	Leakage test nitrogen/helium	ES		22.03.23
5.8	Cut of wires to correct length	ES		"
5.9	Bundle the wires	ES		"
5.10	Install wire bundle	ES		"
5.11	Protection of conductors through fitting			
5.12	Electrical termination (both ends)			
5.13	IR and Continuity check (IR>1GΩ)			
5.14	Verify Cable over length			
5.15	Assemble Mechanical and connector parts			
5.16	Leakage test nitrogen			
5.17	Installation of Bend Restrictor.			
5.18	Filling of silicon oil			
5.19	Completed assembly inspection			
5.20	Marking			

N/A

Sign off.		
Workshop	Date: 22 MARS 2023	Sign.:
TSAS QC (Workshop manager)	Date:	Sign.:

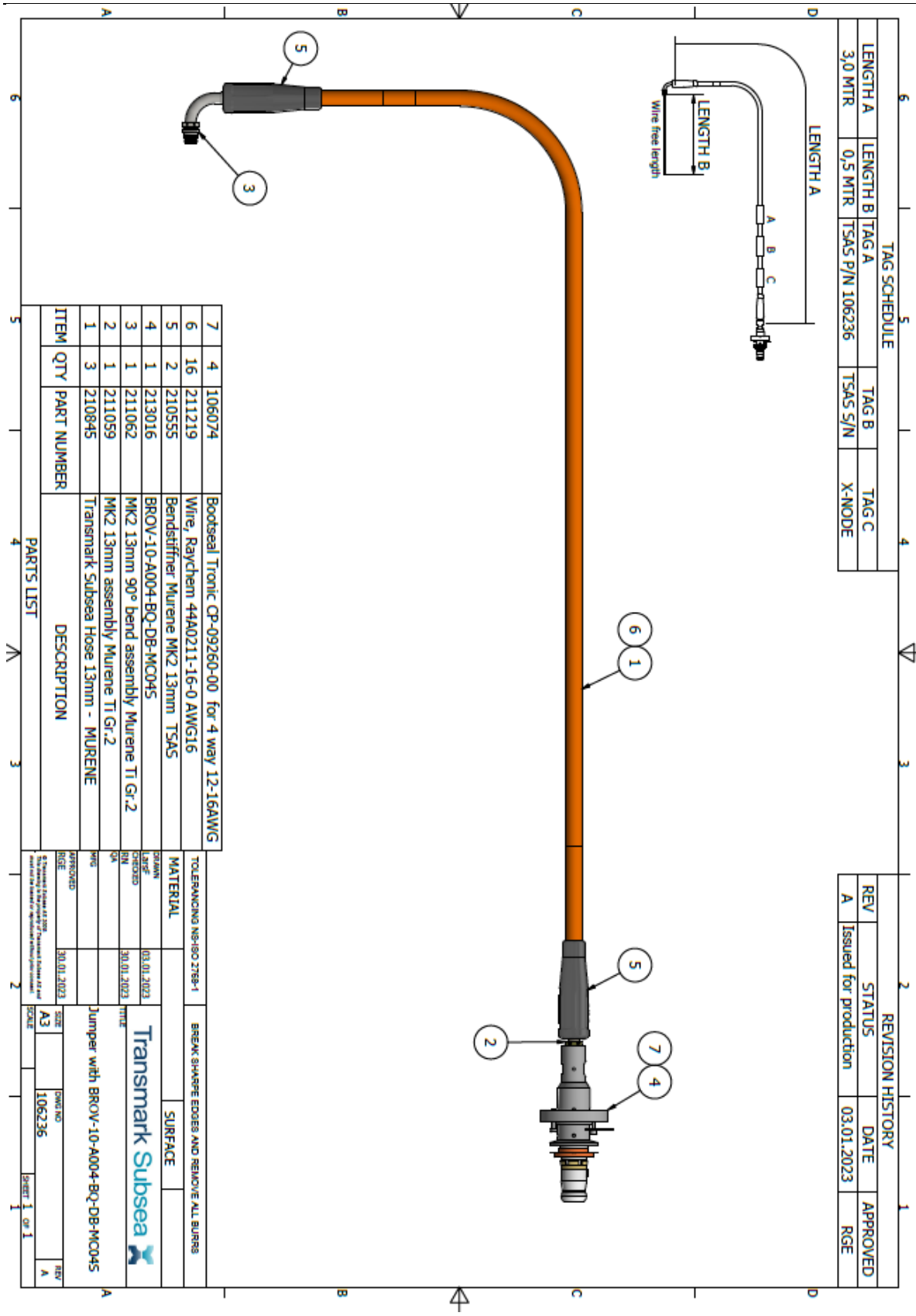
TAG SCHEDULE
LENGTH A
LENGTH B
TAG A
TAG B
TAG C
3,0 MTR
0,5 MTR
TSAS P/N 106236
TSAS S/N
X-NODE
LENGTH A
LENGTH B
Wire free length
A
B
C
REVISION HISTORY
REV
STATUS
DATE
APPROVED
A
Issued for production
03.01.2023
RGE
7 4 106074 Bootseal Tronic CP-09260-00 for 4 way 12-16AWG
6 16 211219 Wire, Raychem 44A0211-16-0 AWG16
5 2 210555 Bendstiffner Murene MK2 13mm TSAS
4 1 213016 BROV-10-A004-BQ-DB-MC045
3 1 211062 MK2 13mm 90° bend assembly Murene Ti Gr.2
2 1 211059 MK2 13mm assembly Murene Ti Gr.2
1 3 210845 Transmark Subsea Hose 13mm - MURENE
ITEM
QTY
PART NUMBER
DESCRIPTION
PARTS LIST
TOLERANCING NS-ISO 2768-1
BREAK SHARPE EDGES AND REMOVE ALL BURRS
MATERIAL
SURFACE
DRAWN
LarsF
03.01.2023
CHECKED
RN
30.01.2023
QA
MFG
APPROVED
RGE
30.01.2023
Transmark Subsea
TITLE
Jumper with BROV-10-A004-BQ-DB-MC045
SIZE
A3
DWG NO
106236
REV
A
SCALE
SHEET 1 OF 1

TSAS Part No: 106235
TSAS Serial No.: 02810

	Description	QTY	Unit	Serial/Heat No.	Material
106256	Mounting bracket for Siemens FO	1	stk		POM
106257	Washer M10 DIN 125	4	stk	20192478	Ti Gr.2
106258	Nut M10 DIN 934	6	stk	20192478	Ti Gr.2
106259	Screw M10 x 40 DIN 933	6	stk	20192478	Ti Gr.2
210555	Bendrestrictor Murene for MK2 13 MM	2	stk	SK36204401	Rubber
210845	Hose, Murene Transmark Subsea Hose , ID13/OD25	3	m	T0010613	Murene
211059	**Fitting Assembly Murene, MK2 13mm,**	**1**	**stk**		
100362-01	Insert Murene MK2 fittings 13mm,	1	stk	20170741	Titan gr2
100363-01	Nut M25x1,5 for fittings Murene MK2	1	stk	202101229	Titan gr2
100364-01	Crimp Sleeve for fittings Murene MK2	1	stk	20213299	Titan gr2
210712	O-ring 15,00 x 1,50	1	stk	31369665	NBR 70
210903	O-ring 19,00 x 1,50	1	stk	59966454	NBR 70
211062	**Bend 90° Assembly Murene, 13mm**	**1**	**stk**		
100363-01	Nut M25x1,5 for fittings Murene MK2 13mm	1	stk	202101229	Titan gr2
100364-01	Crimp Sleeve for fittings Murene MK2 13mm	1	stk	20213299	Titan gr2
103754-01	Bend 90° insert Murene, 13mm MK2	1	stk	20141839	Titan gr2
210712	O-ring 15,00 x 1,50	1	stk	59966454	NBR 70
210903	O-ring 19,00 x 1,50	1	stk	6055864385	NBR 70
215190	SCREW HEXAGON SOCKET SET M8x10	1	stk	20192478	Ti Gr.2

Transmark Subsea		Assembly Check List	
Document no.: 2012-10003-v1	Rev.no.: 1.0	Document Type/ no.: Forms and Templates	Page 2 of 4

Work Order No.	**3444-6**	TSAS S/N:	**02810**
Sales Order No	32859	TSAS P/N:	106235
Client P/N	600008475	Client S/N:	NA
TAG A:	**TSAS P/N 106235**	TAG B:	**TSAS S/N**
TAG C:	**TBD**		

Step. no	DESCRIPTION	Sign. Workshop	Sign. QA/QC	Date
5.1	Verify all released documents	ES	[illegible]	21.03.23
5.2	Inspection of hardware	ES	[illegible]	"
5.3	Cut and prepare hose to correct specified length	ES	[illegible]	"
5.4	Install Bend restrictor if applicable	ES	[illegible]	"
5.5	Fitting installation	ES	[illegible]	"
5.6	Tension test	ES	[illegible]	"
5.7	Leakage test nitrogen/helium	ES	[illegible]	22.03.23
5.8	Cut of wires to correct length			
5.9	Bundle the wires			
5.10	Install wire bundle			
5.11	Protection of conductors through fitting			
5.12	Electrical termination (both ends)			
5.13	IR and Continuity check (IR>1GΩ)			
5.14	Verify Cable over length			
5.15	Assemble Mechanical and connector parts			
5.16	Leakage test nitrogen			
5.17	Installation of Bend Restrictor.			
5.18	Filling of silicon oil			
5.19	Completed assembly inspection			
5.20	Marking			

Sign off.		
Workshop	Date: 22 MARS 2023	Sign.:
TSAS QC (Workshop manager)	Date:	Sign.:

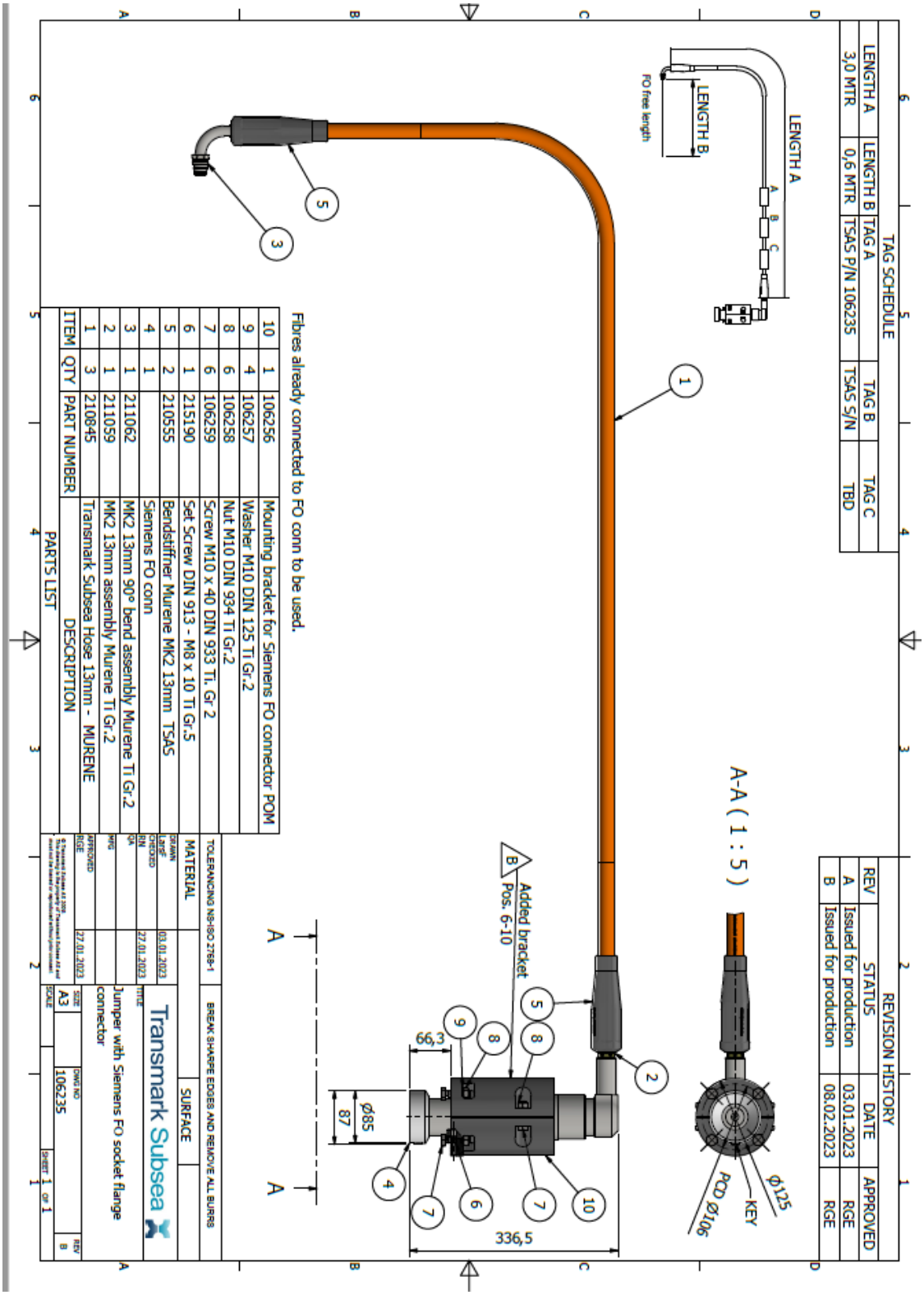
TAG SCHEDULE
LENGTH A 3,0 MTR
LENGTH B 0,6 MTR
TAG A TSAS P/N 106235
TAG B TSAS S/N
TAG C TBD
REVISION HISTORY
REV A Issued for production 03.01.2023 RGE
REV B Issued for production 08.02.2023 RGE
LENGTH A
LENGTH B
FO free length
A-A (1 : 5)
Ø125
KEY
PCD Ø106
Added bracket Pos. 6-10
66,3
Ø85
87
336,5
Fibres already connected to FO conn to be used.
10 1 106256 Mounting bracket for Siemens FO connector POM
9 4 106257 Washer M10 DIN 125 Ti Gr.2
8 6 106258 Nut M10 DIN 934 Ti Gr.2
7 6 106259 Screw M10 x 40 DIN 933 Ti, Gr 2
6 1 215190 Set Screw DIN 913 - M8 x 10 Ti Gr.5
5 2 210555 Bendstiffner Murene MK2 13mm TSAS
4 1 Siemens FO conn
3 1 211062 MK2 13mm 90° bend assembly Murene Ti Gr.2
2 1 211059 MK2 13mm assembly Murene Ti Gr.2
1 3 210845 Transmark Subsea Hose 13mm - MURENE
ITEM QTY PART NUMBER DESCRIPTION
PARTS LIST
TOLERANCING NS-ISO 2768-1
BREAK SHARPE EDGES AND REMOVE ALL BURRS
MATERIAL
SURFACE
DRAWN LarsF 03.01.2023
CHECKED 27.01.2023
APPROVED RGE 27.01.2023
Transmark Subsea
TITLE
Jumper with Siemens FO socket flange connector
SIZE A3
DWG NO 106235
REV B
SCALE
SHEET 1 OF 1

4. MATERIAL CERTIFICATE

TEKNIKUM SEKOITUKSET OY **Production Certificate** **29.11.2022** **Page: 1**

TRANSMARK SUBSEA AS, NORWAY
SO1006493

Compound : SK36204401 CALANDERED S362044AA
Orderno.: 019848
Batch range: -
Date range: 25.11.2022 - 29.11.2022

Filter:
Prod.date 25.11.2022 Tested by TT

Column definitions

1. 40100 Mooney viscosity (1+4)(ir)
2. 40100 Mooney viscosity (1+4)(ir)
3. 41000 Rheometer ISO 3417
4. 41000 Rheometer ISO 3417
5. 41000 Rheometer ISO 3417
6. 41000 Rheometer ISO 3417
7. 41000 Rheometer ISO 3417
8. 41000 Rheometer ISO 3417
9. 50000 Hardness ShA ISO 48-4
10. 52000 Density SFS 4678
11. 60100 Tensile Monsanto T10
12. 60100 Tensile Monsanto T10
13. 62214 Tear strength (Crescent)
14. 55000 Surface Resistance (RTT)

				1.	2.	3.	4.	5.	6.	7.	8.	9.	10.	11.	12.	13.	14.
Test code				40100	40100	41000	41000	41000	41000	41000	41000	50000	52000	60100	60100	62214	55000
Variable				Test temp	ML(1+4)	Test temp	Test time	t10	t90	MH	ML	Hardness ShA	Density	BrkStress	BrkStrain	PeakStress	RTT (ESD)
Variable																	
Unit				°C	MU100°C	°C	min	min	min	dNm	dNm	ShA	kg/l	MPa	%	N/mm	Ohm(E12)
LSL					55.0			1.20	6.00	15.00	1.10	59	1.56	9.0	600	22.0	0.10
USL					75.0			1.60	8.00	19.00	2.10	65	1.60				10.00
Orderno.	Batchno.	Status	Testdate														
019848	1	Fail	25.11.2022	100	52.2	180	10	2.17	7.54	14.64	1.14	61	1.56	10.5	783	25.0	0.46

21.1.2019 PH: Tensile Strength: minimum 10 -> 9 MPa according to collected data.
Minor deviations in rheometer values. Other test results ok. JA (29.11.22)

ALFAGOMMA DUNLOP HIFLEX

ALFAGOMMA Hydraulic Hose Division Plant: Figline Vegliaturo (CS)	Test Report N°: 374/22	Pag 1/2

Nome del tubo (Hose Name): Long Life Subsea
Diam.Nominale (Nom.Size): 20 mm
Batch numbers: T0660212, T0660612, T0660712, T0661012, T0661212, T0661312

COMPOUND TEST

Tube: 1225A

Test	Norm	Test Method	Unit	Limits	Result
Density	ASTM D792	Method A	g/cm³	1.38 - 1.42	**1.41**
Hardness	DIN 53505	3"	Shore A	83 - 89	**87**
Modulus 100%	ISO 37		MPa	Min 7.6	**10.0**
Tensile Strength	ISO 37		MPa	Min 13	**15.0**
Elongation at break	ISO 37		%	Min 150	**216**

Cover: 485I

Test	Norm	Test Method	Unit	Limits	Result
Density	ASTM D792	Method A	g/cm³	1.33 – 1.39	**1.34**
Hardness	DIN 53505	3"	Shore A	57 – 65	**65**
Modulus 100%	ISO 37		MPa	Min 1	**3.9**
Tensile Strength	ISO 37		MPa	Min 8	**11.6**
Elongation at break	ISO 37		%	Min 500	**501**
Ozone resistance	EN 27326	50 pphm/168h/40 °C/20%	%	No crack a 2X	**No crack**
Abrasion resistance	ISO 4649	Method A	mm³	Max 400	**242**

ALFAGOMMA HYDRAULIC S.p.A.
Head Office: Via Enrico Mattei, 5 - 64020 Castelnuovo Vomano (TE) ITALY - Tel. +39.0861.448.1 - Fax +39.0861.57.108
Administration: Nucleo Industriale - 64020 S. Atto (TE) ITALY - Tel. +39.0861.442.1 - Fax +39.039.6287.500
Sales & Marketing: Via Torri Bianche, 1 - 20059 Vimercate (MI) ITALY - Tel. +39.039.6016.1 - Fax +39.039.62.87.279
info@alfagomma.it - www.alfagomma.com

Capitale Sociale € 2.489.790,00 - REA Teramo N° 137780 - C.F. e P.IVA N° IT00327070785

ALFAGOMMA DUNLOP HIFLEX

ALFAGOMMA Hydraulic Hose Division Plant: Figline Vegliaturo (CS)	Test Report N°: 374/22	Pag 2/2

Nome del tubo (Hose Name): Long Life Subsea
Diam.Nominale (Nom.Size): 20 mm
Batch numbers: T0660212, T0660612, T0660712, T0661012, T0661212, T0661312

HOSE TEST

Test	Norm	Test Method	Unit	Limits	Result
Inside diameter (d1)	EN ISO 4671		mm	18.8 ÷ 19.8	**19.4**
Outside diameter (d2)	EN ISO 4671		mm	31.3 ÷ 32.1	**32.0**
Diameter over wire (d3)	EN ISO 4671		mm	26.5 ÷ 27.3	**27.2**
Adhesion (tube/reinforcement)	ISO 8033		N/mm	min 2.0	**5.7**
Adhesion (cover/reinforcement)	ISO 8033		N/mm	min 2.0	**4.8**
Proof pressure at 30 bar	ISO 1402		bar	No leakage	**No leakage**
Change in length at working pressure	ISO 1402		%	-2 ÷ +2	**-0.8**
Minimum Burst Pressure	ISO 1402		bar	min 40	**90**

Date: 29/07/2022

Q.A. Mgr: G. Nigro

GNigro

ALFAGOMMA HYDRAULIC S.p.A.
Head Office: Via Enrico Mattei, 6 - 64020 Castelnuovo Vomano (TE) ITALY - Tel. +39.0861.448.1 - Fax +39.0861.57.106
Administration: Nucleo Industriale - 64020 S. Atto (TE) ITALY - Tel. +39.0861.442.1 - Fax +39.039.6287.500
Sales & Marketing: Via Torri Bianche, 1 - 20059 Vimercate (MI) ITALY - Tel. +39.039.6016.1 - Fax +39.039.62.87.279
info@alfagomma.it - www.alfagomma.com

Capitale Sociale € 2.489.760,00 - REA Teramo N° 137780 - C.F. e P.IVA N° IT00327070785

BAOJI TITANIUM INDUSTRY CO., LTD

BAOTi www.baoti.com

MATERIAL CERTIFICATION

NO: T-20210850589
DATE: 08-31-2021

BAOTI's management system has been approved according to the requirement of AS9100, ISO9001, ISO14001 and OHSAS 18001.

DIN EN 10204 3.1 & PED 2014/68/EU

Commodity: TITANIUM BAR	Finish: ANNEALED
Specification: ASTM B348-19&ASME SB348-2019, Gr.2	

Size[mm]	Quantity[pc]	Net Weight[kg]	Heat No.	Lot No.
Φ25×3000	13	88	20170741	21081348

Chemical Composition (wt. %)

		Ti	Fe	C	N	H	O	Each	Total
Requirement		Remainder	≤0.30	≤0.08	≤0.03	≤0.015	≤0.25	<0.10	<0.40
Result	Top	Remainder	0.09	0.01	<0.01	0.002	0.11	<0.10	<0.40
	Bottom	Remainder	0.09	0.02	<0.01	0.003	0.11		

Tensile Test

Requirement		Tensile Strength (MPa)	Yield Strength $_{0.2}$ (MPa)	Elongation A4D (%)	Reduction of Area (%)	HRB
Standard Values	L	≥345	≥275	≥20	≥30	≤100
Result	L1	439	290	36.0	59	80.5/80.5/80.5
	L2	442	299	34.0	62	80.5/81.0/80.5

Other Tests

Dimensional Inspection	Visual Inspection	Macrostructure Test	UT Inspection
ACCEPTABLE	ACCEPTABLE	ACCEPTABLE	ACCEPTABLE
VAR/EB	Heat Treatment	/	/
VAR(3)	610℃/1.5h,AC.	/	/

I hereby certify this product conforms to ALL specifically listed technical requirements, and other requirements for these specifications. Furthermore, I certify the above stated quantitative results were derived from testing and analysis, and are in accordance with the referenced specification(s) requirements. No mercury contamination and radio-activity.

Note:
1.Hydrogen ----- product analysis.
2.According to NORSOK MDS T01.Rev.5.
3.HRB according to NACE MR 0175-2009.

QUALITY DEPARTMENT

BAOJI TITANIUM INDUSTRY CO., LTD.
NO.88 HIGH-TECH ROAD, BAOJI, SHAANXI, CHINA
TEL: 86-917-3382013 FAX: 86-917-3382316

Issued No.2019-0 The file copied is invalid.

00588

BAOJI TITANIUM INDUSTRY CO., LTD

BAOTi
www.baoti.com

MATERIAL CERTIFICATION

NO: T-20220850272
DATE: 05-12-2022

BAOTI's management system has been approved according to the requirement of AS9100, ISO9001, ISO14001 and OHSAS 18001.

DIN EN 10204 3.1 & PED 2014/68/EU

Commodity: TITANIUM BAR					Finish: ANNEALED			
Specification: ASTM B348-19&ASME SB348-2019&ASTM B381-19&ASME SB381-2019, Gr.2								
Size[mm]		Quantity[pc]			Net Weight[kg]		Heat No.	Lot No.
Φ30×3000		35			345		202101229	22081165
Chemical Composition (wt. %)								
Requirement		Ti	Fe	C	N	H	O	Each	Total
		Remainder	≤0.30	≤0.08	≤0.03	≤0.015	≤0.25	<0.10	<0.40
Result	Top	Remainder	0.02	0.01	0.01	<0.001	0.14	<0.10	<0.40
	Bottom	Remainder	0.03	0.01	<0.01	<0.001	0.13		

Tensile Test						
Requirement		Tensile Strength (MPa)	Yield Strength 0.2 (MPa)	Elongation A4D (%)	Reduction of Area (%)	HRB
Standard Values	L	≥345	≥275	≥20	≥30	≤100
Result	L1	512	330	31.0	57	84.5/84.5/84.5
	L2	516	330	32.0	57	84.0/84.5/84.5

Other Tests			
Dimensional Inspection	Visual Inspection	Macrostructure Test	UT Inspection (AMS2631E Class A1)
ACCEPTABLE	ACCEPTABLE	ACCEPTABLE	ACCEPTABLE
VAR/EB	Heat Treatment	/	/
VAR(2)	600℃/1h,AC.	/	/

I hereby certify this product conforms to ALL specifically listed technical requirements, and other requirements for these specifications. Furthermore, I certify the above stated quantitative results were derived from testing and analysis, and are in accordance with the referenced specification(s) requirements. No mercury contamination and radio-activity.

Note:
1.Hydrogen ----- product analysis.
2.According to NORSOK MDS T01.Rev.5.
3.HRB according to NACE MR 0175-2009.

QUALITY DEPARTMENT

BAOJI TITANIUM INDUSTRY CO., LTD.
NO.88 HIGH-TECH ROAD, BAOJI, SHAANXI, CHINA
TEL: 86-917-3382013 FAX: 86-917-3382316

Issued No.2019-0 The file copied is invalid.

BAOJI TITANIUM INDUSTRY CO., LTD

BAOTi www.baoti.com

MATERIAL CERTIFICATION

NO: T-20220550044
DATE: 01-13-2022

BAOTI's management system has been approved according to the requirement of AS9100, ISO9001, ISO14001 and OHSAS 18001.

EN10204 3.1&PED 2014/68/EU

Commodity: TITANIUM BAR				Finish: ANNEALED	
Specification: ASTM B348-19&ASME SB348-2019&ASTM B381-19&ASME SB381-2019, Gr.2					
Size[mm]	Quantity[pc]	Net Weight[kg]	Heat No.	Lot No.	
Φ35×3000	19	254	20213299	21053123	

Chemical Composition (wt. %)

		Ti	Fe	C	N	H	O	Each	Total
Requirement		Remainder	≤0.30	≤0.08	≤0.03	≤0.015	≤0.25	<0.10	<0.40
Result	Top	Remainder	0.02	0.01	<0.01	<0.001	0.12	<0.10	<0.40
	Bottom	Remainder	0.02	0.01	<0.01	0.001	0.12		

Tensile Test

Requirement		Tensile Strength (MPa)	Yield Strength 0.2 (MPa)	Elongation A4D (%)	Reduction of Area (%)	HRB
Standard Values	L	≥345	≥275	≥20	≥30	≤100
Result	L	477	297	33.5	56	81.0/83.0/83.0
	L	483	300	32.5	42	82.0/82.0/81.5

Other Tests

Dimensional Inspection	Visual Inspection	Macrostructure Test	UT Inspection (AMS2631E Class A1)
ACCEPTABLE	ACCEPTABLE	ACCEPTABLE	ACCEPTABLE
VAR/EB	Heat Treatment	/	/
VAR(2)	650℃/1.5h.AC	/	/

I hereby certify this product conforms to ALL specifically listed technical requirements, and other requirements for these specifications. Furthermore, I certify the above stated quantitative results were derived from testing and analysis, and are in accordance with the referenced specification(s) requirements. No mercury contamination and radio-activity.

Note:
1.Hydrogen ----- product analysis.
2.According to NORSOK MDS T01.Rev.5.
3.HRB according to NACE MR 0175-2009.

QUALITY DEPARTMENT

BAOJI TITANIUM INDUSTRY CO., LTD.
NO.88 HIGH-TECH ROAD, BAOJI, SHAANXI, CHINA
TEL: 86-917-3382013 FAX: 86-917-3382316

Issued No.2019-0 The file copied is invalid.

OTTO OLSEN

CERTIFICATE OF CONFORMITY

IN ACCORDANCE WITH - EN 10204:2005 TYPE 2.1

Recipient	**Dato / Date**	14.09.2022
Transmark Subsea AS		
Nedre Nøttveit 16	**Sted / Location**	Skedsmokorset
Rådal,5238		
NO	**Pakkseddelnr. / Packing list no.**	0000201773

Otto Olsen ordrenr. / Order no.
992739

Ordre nr. / Order no.
49057

Vår kontaktperson / Our contact person
Tommy Kristiansen

Deres kontaktperson / Your contact person
Monika Sledzka

Otto Olsen ordrenr. / Order no.

992739

Otto Olsen bekrefter at produkterne nevnt nedenfor er levert i henhold til mottatt ordre/spesifikasjon
Otto Olsen confirms that the products mentioned below are delivered according to order/specification

Pos no.	Artikel-nr. Article no.	Beskrivelse Description	HS no. / Origin	Customer Vare no. Item no.	Vare Spesifikasjon Item Specification	Antall Quantity	Enhet Unit	Pakkseddel Packinglist no.	Batch no. & Cure Date / (dd.mm.year)	
10	3133110	O-Ring 19,00 X 1,50 NBR 70	40169300 / VN		36624	367	stk	0000201773	59966454 22020	
10	3133110	O-Ring 19,00 X 1,50 NBR 70	40169300 / VN		36624	4	stk	0000201773	58977167-/102018	
20	3131966	O-Ring 15,00 X 1,50 NBR 70	40169300 / VN		36624	500	stk	0000201773	61369665-112021	

Saksbehandler / Treated by

Tommy Kristiansen

Signatur / Signature

OTTO OLSEN AS	**Leveringsadresse**	**Kontakt**
Postboks 243	Trondheimsveien 183	Tlf: 63 89 08 00
2021 Skedsmokorset	2020 Skedsmokorset	post@oo.no
Norway	Norway	www.oo.no

BAOJI TITANIUM INDUSTRY CO., LTD

BAOTi
www.baoti.com

MATERIAL CERTIFICATION

NO: T-20160850067

DATE: Mar. 22, 2016

BAOTI's management system has been approved according to the requirement of AS9100, ISO9001, ISO14001 and OHSAS 18001.

EN10204 3.1

Commodity: TITANIUM BAR | Finish: ANNEALED

Specification: ASTM B348-2010/ASTM B381-2010, GR.2

Size [mm]	Quantity [pc]	Net Weight [kg]	Heat No.	Lot No.
DIA.22×2000~3000	58	257	20141839	15081253

Chemical Composition (wt. %)

		Ti	Fe	C	N	O	H	Residual Element Each	Residual Element Total
Requirement		Remainder	≤0.30	≤0.08	≤0.03	≤0.25	≤0.015	≤0.10	≤0.40
Result	Top	Remainder	0.03	0.02	<0.01	0.14	<0.001	<0.10	<0.40
	Bottom	Remainder	0.03	0.02	0.01	0.15	<0.001		

Tensile Test

	Tensile Strength (MPa)	Yield Strength 0.2% (MPa)	Elongation (%)	Reduct. of Area. (%)	HRB
Requirement	345MIN	275MIN	20MIN	30MIN	100MAX
Result	507/494	343/330	31.0/34.0	54/59	87.0/87.0

Other Test

Visual Inspection	Dimensional Inspection
ACCEPTABLE	ACCEPTABLE
Macrostructure	Ultrasonic Inspection (AMS 2631D, Class A1)
ACCEPTABLE	ACCEPTABLE

I hereby certify this product conforms to ALL specifically listed technical requirements, and other requirements for these specifications. Furthermore, I certify the above stated quantitative results were derived from testing and analysis, and are in accordance with the referenced specification(s) requirements. No mercury contamination and radio-activity.

Note:

1. Hydrogen ------- product analysis.
2. Heat treatment: 620°C/1h, AC.
3. According to NORSOK M-650 MDS T01. Rev.4 TR2000 .

Astrup AS 09/05/16 HE
1300049/1 46
Titan bolt gr 2 22mm ASTM B348 /
Norsok MDS 650 TR2000
20141839

QUALITY DEPARTMENT

BAOJI TITANIUM INDUSTRY CO., LTD.
NO.1 TAICHENG ROAD, BAOJI, SHAANXI, CHINA
TEL: 86-917-3382013 FAX: 86-917-3382316

Issued No.2010-0

The file copied is invalid.

BAOJI TITANIUM INDUSTRY CO., LTD

BAOTI
www.baoti.com

MATERIAL CERTIFICATION

NO: T-20190351340
DATE: 11-19-2019

BAOTI's management system has been approved according to the requirement of AS9100, ISO9001, ISO14001 and OHSAS 18001.

EN10204 3.1

Commodity: TITANIUM PLATE	Finish: ANNEALED
Specification: ASTM B265-15, Gr.2	

Size[mm]	Quantity[pc]	Net Weight[kg]	Heat No.	Lot No.
10×1000×2000	12	1167	20192478	19034313

Chemical Composition (wt. %)

		Ti	Fe	C	N	H	O	Each	Total
Requirement		Remainder	≤0.30	≤0.08	≤0.03	≤0.015	≤0.25	<0.10	<0.40
Result	Top	Remainder	0.03	0.02	<0.01	0.001	0.14	<0.10	<0.40
	Bottom	Remainder	0.03	0.01	<0.01	<0.001	0.13		

Tensile Test

Requirement		Tensile Strength (MPa)	Yield Strength (MPa)	Asomm (%)
Standard Values	L/T	≥345	275~450	≥20
Result	L1/L2	449/439	313/306	34.0/33.5
	T1/T2	444/443	323/326	33.0/32.5

Other Tests

Dimensional Inspection	Visual Inspection	VAR/EB	/
ACCEPTABLE	ACCEPTABLE	VAR(2)	/

I hereby certify this product conforms to ALL specifically listed technical requirements, and other requirements for these specifications. Furthermore, I certify the above stated quantitative results were derived from testing and analysis, and are in accordance with the referenced specification(s) requirements. No mercury contamination and radio-activity.

Note:
1.Hydrogen ----- product analysis.
2.According to NORSOK M-650 MDS T01. REV5, MDS TS103.REV.0; TR2000.

QUALITY DEPARTMENT

BAOJI TITANIUM INDUSTRY CO., LTD.
NO.59 HIGH-TECH ROAD, BAOJI, SHAANXI, CHINA
TEL: 86-917-3382018 FAX: 86-917-3382118

Issued No.2019-0 The file copied is invalid.

astri

RÖCHLING

Document No.: **PA0399679**
Printing Date: 18.06.19
Page: 1 of 1

Röchling Sustaplast SE & Co. KG • Sustaplast-Str. 1 • 56112 Lahnstein

Astrup AS
Ann Kristin Arnesen Oi
Postboks 8 Haugenstua
0915 Oslo
Norwegen

Your Reference: 1523638
Order No.: 871329 / 40000
Your Customer No.: 55758

Quantity: 15 piece
Base Material: SUSTAPEEK
Measurement: Ø 12 x 3000 mm
Form: rod
Color: natural

Astrup AS -- 15236380004 -- PEEK bolt naturbeige 12mm (std 3m) --

EN 10204 - Test Report (2.2)

Results from random tests

Property	Value	Measuring unit	Test method
Modulus of elastictiy	3962	MPA	DIN EN ISO 527-2
Yield stress	113	MPA	DIN EN ISO 527-2
Tensile strength	112	MPA	DIN EN ISO 527-2
Elongation at break	23	%	DIN EN ISO 527-2
Notched impacted strength	2,24	KJ/M²	DIN EN ISO 179-1
Shore Hardness	87		DIN EN ISO 868
Ball indentation hardness	238	N/MM²	DIN EN ISO 2039-1
Melting temperature	344	°C	DIN EN ISO 11357-3
Density	1,30	G/CM³	DIN EN ISO 1183-1

Above mentioned information is a result of quality tests.
The provision of this data does not release users from their obligation to conduct their own tests and inspections.
The above information does not guarantee the suitability of the product for a specific purpose.
This document is generated automatically and is valid without signature.

Röchling Sustaplast SE & Co. KG
Postfach 13 57, 56103 Lahnstein/Germany
Sustaplast-Str. 1, 56112 Lahnstein/Germany
Tel. +49 2621 693-0, Fax +49 2621 693-170
info@sustaplast.de, www.roechling.com
Sitz: Lahnstein, Amtsgericht Koblenz HRA 3276

Persönlich haftende Gesellschafterin:
Röchling SE & Co. KG
Richard-Wagner-Str. 9, 68165 Mannheim/Germany
Sitz: Mannheim, Amtsgericht Mannheim HRA 3529

Standort Nentershausen:
Lahnstr. 22, 56412 Nentershausen/Germany
formtechnik@sustaplast.de

USt.-Id.-Nr. DE 811 245 391

Persönlich haftende Gesellschafterin der Röchling SE & Co. KG:
Röchling Beteiligungs SE, Richard-Wagner-Str. 9, 68165 Mannheim/Germany
Sitz: Mannheim, Amtsgericht Mannheim HRB 719353
Vorstand: Prof. Dr. Hanns-Peter Knaebel (Vors.), Erwin Doll (stv. Vors.), Franz Lübbers
Aufsichtsratsvorsitzender: Johannes Freiherr von Salmuth

Deutsche Bank AG, Koblenz
Kto 076 6303, BLZ 570 700 45
BIC DEUTDE5M570
IBAN DE14 5707 0045 0076 6303 00

JOHNSON METALL AB

TEST REPORT
According to SS-EN 10204 – 2.2

Date
2021-04-28

Our ref.
N2054978-7

Contact person

INTERMEC AS

KLEPPEVEGEN 75
NO-5300 KLEPPESTØ

NORGE

Alloy
JM 7-20

Your ref.
IP-504779

Drawing no.

Part no.
9501-0106A

Description
Bar

Size
Ø 46 mm

Quantity
3,0 m

Your order has been manufactured in the above mentioned JM – standardalloy.

Stated proportions of analysis and mechanical properties for this alloy are the results of tests made during running production. The metal has herby shown the following chemical composition and mechanical properties.

Chemical properties

%	Al	Cu	Fe	Mn	Ni	Pb	Si	Sn	Zn
Min	8,5	Rem	3,5		4,0				
Max	11,0	Rem	4,5	2,5	6,0	0,05	0,1	0,2	0,5

Mechanical properties

$Rp_{0,2}$	Rm	A_{50}	HB
N/mm^2	N/mm^2	%	10/1000
>270	>630	>10	>170

The analysis and the mechanical properties are compared with UNS: C 63000

Yours faithfully
JOHNSON METALL AB
Laboratory

Mikael Edberger
Inspection representative

JOHNSON METALL AB
Postadress/Postal address
P.O Box 1513
SE-701 15 Örebro
Sweden
Gatuadress/Office address
Stålgatan 15, Örebro
Styrelsens säte/Reg office
Örebro

Telefon/Telephone
019-175100 int +46 19 175100
Telefax/Fax
019-148340 int +46 19 148340
E-mail:
info.orebro@johnson-metall.com
Internet:
http://www.johnson-metall.com

Org.nr/Reg.no.
18-556062-0196
Moms reg.nr./VAT no.
SE556062019601
Innehar
F-Skattebevis
Certifikat/Certificate
ISO 9001 ISO 14001

Bankgiro/Bank account
614-3606
Bank/Bankers
Nordea Bank AB
Kontonr./Acc.no.
18 041 701 051
Swiftcode
NDEASESS

BAOJI NONFERROUS METALS WORKS

MATERIAL CERTIFICATE

According to DIN 50049-3.1B

Date: 25/06/96
No:C96585044-6

CONSIGNEE :

CONTRACT NO.:

DESTINATION :

MARKS & NUMBER

BR. DAHL A/S
ROTTERDAM

TITAN GR2

Commodity: TITANIUM BAR

Specification: ASTM B348, GR.2 — Condition: ANNEALING AND TURNED

Item No.	Size [mm]	Heat No.	Quantity [pc.]	Net Weight [kg]	Lot No.
1	DIA. 90 x 1650 MIN.	1257	4	214	
2	DIA. 90 x 1620 MIN.	1145	8	532	
3	DIA. 90 x 1700 MIN.	1146	10	639	
4	DIA.100 x 1600 MIN.	1111	1	221	
5	DIA.100 x 1700 MIN.	1154	12	985	

Chemical Composition , (wt. %)

Item No.	Heat No.	Fe	C	N	O	H			Ti
	Requirement:(MAX)	0.30	0.10	0.03	0.25	0.0125			
1	1257	0.10	0.01	0.02	0.16	0.003			REMAINDER
2	1145	0.13	0.01	0.01	0.12	0.002			〃
3	1146	0.14	0.01	0.01	0.15	0.003			〃
4	1111	0.09	0.01	0.03	0.15	0.003			〃
5	1154	0.13	0.01	0.01	0.12	0.002			〃

Item No.	Lot / Heat No.	Tensile Strength [MPa]	Yield Strength, 0.2% [MPa]	Elongation [%]	Reduct.of Area [%]
	Requirements:	MIN. 345	MIN. 275	MIN. 20	MIN. 30
1	1257	485	365	32	52
2	1145	490	370	26	54
3	1146	480	350	32	57
4	1111	515	370	30	50
5	1154	480	320	35	54

Item No.	Lot / Heat No.	Ultrasonic Test	Visual Inspection	Dimensional Inspection
1 to 5		ACCEPTABLE	ACCEPTABLE	ACCEPTABLE

We hereby certify that the material described above has been tested and complies with the terms of the order contirmation. Inspection and dimensional control without complaints.

Note: HYDROGEN AND OXYGEN ---- PRODUCT ANALYSIS.

BAOJI NONFERROUS METALS WORKS 宝鸡有色金属厂 SHAANXI · CHINA

teamtrade as
Packing List no.
P.O.no.
Item no.
Stock no.

Liu Jingzhong

MANAGER OF QUALITY DEPARTMENT
BAOJI NONFERROUS METALS WORKS

Astrup AS -- 16556630002 -- RF akselstål 30mm EN 1.4418 QT 900 slipt h9 a 6-6,2m -- 111226

Made in Germany

ABNAHMEPRÜFZEUGNIS EN 10204
INSPECTION CERTIFICATE ACCORDING TO 3.1
CERTIFICAT DE RECEPTION

Deutsche Edelstahlwerke

Zeugnisnr. 364976 / Seite Page / Page 1 / 2

Hersteller / Manufacteur / Producteur: Deutsche Edelstahlwerke Specialty Steel GmbH & Co. KG, D-57012 SIEGEN

zertifiziert nach: DIN EN ISO 9001, IATF 16949, ISO 14001, DGR 2014/68/EU, PED 2014/68/EU

Uns. Auftr.-Nr. / Order-No. / Notre Com. No.: 1923311

Besteller / Customer / Client: ASTRUP AS

Bestell_Nr. / Order-No. / Commande No.: 1655663

ASTRUP AS

POSTFACH 8
NO-0915-OSLO

Werkstoff / Quality / Nuance: 1.4418 / X4CRNIMO16-5-1 / SS2387/S165M

Gießverfahren / Casting process / Procédé de coulée: Strangguss / Continuous casting / Coulée Continue

Erschmelzungsart / Melting Furnance / Mode de fusion: Elektrostahl / Electric-arc-furnace steel / Acier électrique

Vertriebstext / Product / Produit: Blankstahl aus nichtrostendem Stahl
Acidur 4418, X4CRNIMO16-5-1, 1.4418, SS2387/S165M
gewalzt, vergütet, gerichtet, geschält, geschliffen

weitere Anforderungen vorhanden, siehe Zusatztexte

Schmelzen-Nr. Cast No./Coulée No.	Proben-Nr. Test N./Eprouv.N.	Fertigungsauftrag Lot no./Lot fabr.	Pos. Item/Poste	Abmessung Dimensions/Dimensions mm	Stückzahl Quantity / Nombre	Gewicht Weight / Masse KG	Stempel Abnahmebeauftragter Inspector's stamp
111226	491105	491105	002	30,00 + 0,000/-0,052 RD		846	WA

Schmelzen-Nr. Cast No/Coulée No	% C	% SI	% MN	% P	% S	% CR	% MO	% NI	% N
111226	0,030	0,36	0,96	0,022	0,004	15,27	0,900	4,70	0,0560

Proben-Nr Test No. Eprouv.N.	Ref. Zust	Probenabm. Samp.Dim. Dim.d'epr.	Problg. Spec.Pos. Pos.d'epr	Zugversuch Tensile test / Essai de traction Temp °C	RP0,2 MPA	RP1,0 MPA	RM MPA	A5 %	Z %	Kerbschlagversuch Impact test / Essai de résilience °C	JOULE	JOULE	JOULE		Härteprüfung Hardness Dureté
491105		12.46 mm	L	23	889	911	973	17.5	62	-40	150	140	140	DIN EN ISO 148-1 Charpy-V	
										23	164	168	164	DIN EN ISO 148-1 Charpy-V	294HB

Schmelze wurde VOD behandelt.
Wärmebehandlung: Härtetemperatur > 950 °C, < 1.000 °C, Polymer, Anlasstemperatur > 500 °C, < 580 °C, LUFT,
Heattreatment: Hardened > 950 °C, < 1.000 °C, Polymer, Tempered > 500 °C, < 580 °C, LUFT,
100 % rissgeprüft gemäß EN 10277-1 Klasse 4: ohne Beanstandung.
Die Lieferung wurde 100 % US-geprüft nach EN 10308 Typ 1A Tab2 QK4: ohne Beanstandung.
Delivery 100 % US-checked acc. to EN 10308 Typ 1A Tab2 QK4: satisfactory.
AUCH / ALSO / AUSSI / TAMBIEN EN 10228-4 Typ 1a,

Das Zeugnis wurde maschinell erstellt und ist gemäß EN 10204 ohne Unterschrift rechtsverbindlich.
This certificate was generated by a data system, acc. to EN 10204, it is valid without signature.
Ce certificat a été établi sur systéme informatique et est valable selon EN 10204 sans signature.

Tel: 0271/808-2642
Fax: 0271/808-2521
Email: verena.frisch@dew-stahl.com

Datum: 24.08.2021
Frisch
(Abnahmebeauftragter/ Inspector)

Astrup AS -- 16556630002 -- RF akselstål 30mm EN 1.4418 QT 900 slipt h9 a 6-6,2m -- 111226

Made in Germany

ABNAHMEPRÜFZEUGNIS EN 10204
INSPECTION CERTIFICATE ACCORDING TO 3.1
CERTIFICAT DE RECEPTION

Deutsche Edelstahlwerke

Zeugnisnr. 364976 / Seite Page / Page 2 / 2

Besteller / Customer / Client: ASTRUP AS

Bestell Nr. / Order-No. / Commande No.: 1655663

Hersteller / Manufacteur / Producteur: Deutsche Edelstahlwerke Specialty Steel GmbH & Co. KG, D-57012 SIEGEN

Uns. Auftr.-Nr. / Order-No. / Notre Com. No.: 1923311/002

Proben-Nr. / Test N. / Eprouv.N.: 491105

Tab.4, Qk.3 / ASTM A 388 GEWAEHRLEISTET /
GUARANTEED / GARANTI / GARANTIZADO
MASS UND OBERFLAECHENKONTROLLE: KEINE BEANSTANDUNG
DIMENSIONS AND SURFACE INSPECTION: SATISFACTORY

WIR BESTAETIGEN, DASS DIESE LIEFERUNG DEN SCHRIFTLICHEN
VEREINBARUNGEN BEI DER BESTELLUNG ENTSPRICHT
We confirm the production of your order is according to the written
agreement of our order acknowledgement
DAS MATERIAL IST FREI VON RADIOAKTIVITÄT
(<0,1Bq/g bezogen auf Co-60).

Herstellland: Deutschland
THE PRODUCT IS FREE FROM RADIOACTIVITY.
(<0,1Bq/g based on Co-60).

Location of production: Germany
PRUEF. AUF WERKSTOFFIDENTITAET:100% SPEKTROSKOP.OB
TEST TO VERIFY QUAL.:100% SPECTROSC. WITHOUT INDIC.

weitere Anforderungen:
Toleranz
EN 10278 12-1999 h9
gemäß
EN 10088-3 12-2014 QT900
MDS 1.4418 QT900 DEW 11-2014
gemäß Stellungnahme
vom 16.03.2016
---
bright steel made of stainless steel
Acidur 4418, X4CRNIMO16-5-1, 1.4418,
SS2387/S165M
hot rolled, hardened and tempered,
straightened, peeled, ground
tolerance
EN 10278 12-1999 h9
according to
EN 10088-3 12-2014 QT900
MDS 1.4418 QT900 DEW 11-2014
according to our comments
vom 16.03.2016

VERFORMUNGSGRAD / HOT FORMING RATIO: 91:1

Das Zeugnis wurde maschinell erstellt und ist gemäß EN 10204 ohne Unterschrift rechtsverbindlich.
This certificate was generated by a data system, acc. to EN 10204, it is valid without signature.
Ce certificat a été établi sur systéme informatique et est valable selon EN 10204 sans signature.

Tel: 0271/808-2642
Fax: 0271/808-2521
Email: verena.frisch@dew-stahl.com

Datum: 24.08.2021
Frisch
(Abnahmebeauftragter/ Inspector)

BAOJI TITANIUM INDUSTRY CO., LTD

BAOTi www.baoti.com

MATERIAL CERTIFICATION

NO: T-20180550177

DATE: Sep. 3rd, 2018

BAOTI's management system has been approved according to the requirement of AS9100, ISO9001, ISO14001 and OHSAS 18001.

EN10204 3.1

Commodity: TITANIUM BAR	Finish: ANNEALED
Specification: ASTM B348-2010/ASTM B381-2010, GR.5	

Size [mm]	Quantity [pc]	Net Weight [kg]	Heat No.	Lot No.
DIA.180×2000～3000	1	312	20141574	18051510

Chemical Composition (wt. %)

		Ti	Al	V	Fe	C	N	O	H	Residual Element Each	Residual Element Total
Requirement		Remainder	5.5～6.75	3.5～4.5	≤ 0.40	≤ 0.08	≤ 0.05	≤ 0.20	≤ 0.015	≤ 0.10	≤ 0.40
Result	Top	Remainder	6.37	4.05	0.15	0.01	<0.01	0.19	0.003	<0.10	<0.40
	Bottom	Remainder	6.34	4.01	0.15	0.01	<0.01	0.19	0.003		

Tensile Test

Requirement		Tensile Strength (MPa)	Yield Strength 0.2% (MPa)	Elongation A_{4D} (%)	Reduct. of Area. (%)	HRC
Result	T	954	852	14.0	23	33.0/31.5/32.0

Other Test

Visual Inspection	Dimensional Inspection
ACCEPTABLE	ACCEPTABLE
Macrostructure	Ultrasonic Inspection (AMS 2631E, Class B)
ACCEPTABLE	ACCEPTABLE

I hereby certify this product conforms to ALL specifically listed technical requirements, and other requirements for these specifications. Furthermore, I certify the above stated quantitative results were derived from testing and analysis, and are in accordance with the referenced specification(s) requirements. No mercury contamination and radio-activity.

Note:

1. Hydrogen ------- product analysis.
2. Heat treatment: 750℃/2h.AC.
3. According to NORSOK M-650 MDS T01, Rev.4 TR2000.
4. Melting method: VAR×2.

QUALITY DEPARTMENT

BAOJI TITANIUM INDUSTRY CO., LTD.
NO.1 TAICHENG ROAD, BAOJI, SHAANXI, CHINA
TEL: 86-917-3382013 FAX: 86-917-3382316

Issued No.2010-0

The file copied is invalid.

Astrup AS -- 14578220009 -- Titan bolt gr 5 180mm ASTM B348 NORSOK MDS 650 TR2000 --

1-av 1

BAOJI TITANIUM INDUSTRY CO., LTD

BAOTI www.baoti.com

MATERIAL CERTIFICATION

NO: T-2015055193

DATE: Jul. 8, 2015

BAOTI's management system has been approved according to the requirement of AS9100, ISO9001, ISO14001 and OHSAS 18001.

EN10204 3.1

Commodity: TITANIUM BAR	Finish: ANNEALED
Specification: ASTM B348-2010/ ASTM B381-2010 GR.2	

Size [mm]	Quantity [pc]	Net Weight [kg]	Heat No.	Lot No.
DIA.70×2716～2995	12	626	20141866	15050535

Chemical Composition (wt. %)

Requirement		Ti	Fe	C	N	O	H	Residual Element Each	Residual Element Total
		Remainder	≤0.30	≤0.08	≤0.03	≤0.25	≤0.015	≤0.10	≤0.40
Result	Top	Remainder	0.07	0.01	<0.01	0.14	0.001	<0.10	<0.40
	Bottom	Remainder	0.07	0.02	<0.01	0.14	0.001		

Tensile Test

Requirement	Tensile Strength (MPa)	Yield Strength 0.2% (MPa)	Elongation (%)	Reduct. of Area. (%)	HRB
	345MIN	275MIN	20MIN	30MIN	100MAX
Result	516/513	347/357	27.5/28.0	49/50	87.5/84.5

Other Test

Visual Inspection	Dimensional Inspection
ACCEPTABLE	ACCEPTABLE
Macrostructure	Ultrasonic Inspection (AMS 2631D, Class A)
ACCEPTABLE	ACCEPTABLE

I hereby certify this product conforms to ALL specifically listed technical requirements, and other requirements for these specifications. Furthermore, I certify the above stated quantitative results were derived from testing and analysis, and are in accordance with the referenced specification(s) requirements. No mercury contamination and radio-activity.

Note:

1. Hydrogen ------- product analysis.
2. Heat treatment: 650℃/1.5h.AC.
3. According to NORSOK M-650 MDS T01 REV.4

Astrup AS 27/08/15 eveK
1253200/1 36
Titan bolt gr 2 70mm ASTM B348 /
Norsok MDS 650 TR2000
20141866

QUALITY DEPARTMENT

BAOJI TITANIUM INDUSTRY CO., LTD.
NO.1 TAICHENG ROAD, BAOJI, SHAANXI, CHINA
TEL: 86-917-3382013 FAX: 86-917-3382316

Issued No.2010-0

The file copied is invalid.

BAOJI TITANIUM INDUSTRY CO., LTD

BAOTI www.baoti.com

MATERIAL CERTIFICATION

NO: T-20160550300

DATE: Dec. 1, 2016

BAOTI's management system has been approved according to the requirement of AS9100, ISO9001, ISO14001 and OHSAS 18001.

DIN EN 10204 3.1 & PED 97/23/EC

Commodity: TITANIUM BAR | Finish: ANNEALED

Specification: ASTM B348-2013/ASTM B381-2013; GR.2

Size [mm]	Quantity [pc]	Net Weight [kg]	Heat No.	Lot No.
DIA.50×3000	10	274	20150476	16051534

Chemical Composition (wt. %)

Requirement		Ti	Fe	C	N	O	H	Residual Element Each	Residual Element Total
		Remainder	≤0.30	≤0.08	≤0.03	≤0.25	≤0.015	≤0.10	≤0.40
Result	Top	Remainder	0.06	0.02	<0.01	0.12	0.002	<0.10	<0.40
	Bottom	Remainder	0.06	0.01	<0.01	0.12	0.002		

Tensile Test

Requirement	Tensile Strength (MPa)	Yield Strength 0.2% (MPa)	Elongation (%)	Reduct. of Area. (%)	HRB
	345MIN	275MIN	20MIN	30MIN	100MAX
Result	494/481	338/325	33.5/32.5	60/59	81.0/83.0

Other Test

Visual Inspection	Dimensional Inspection	Macrostructure
ACCEPTABLE	ACCEPTABLE	ACCEPTABLE

Liquid Penetrant Test	Ultrasonic Inspection (AMS 2631D, Class A1)
ACCEPTABLE	ACCEPTABLE

I hereby certify this product conforms to ALL specifically listed technical requirements, and other requirements for these specifications. Furthermore, I certify the above stated quantitative results were derived from testing and analysis, and are in accordance with the referenced specification(s) requirements. No mercury contamination and radio-activity.

Note:

1. Hydrogen ------- product analysis.
2. According to NORSOK MDS T01.Rev.5 & NACE MR 0175-2009 & Statoil TR2000 TB101.

APPROVED
SVERDRUP STEEL AS
Q.C. DEPT.

BAOJI TITANIUM INDUSTRY CO., LTD. INSPECTION 检验 BAOJI CHINA

QUALITY DEPARTMENT

BAOJI TITANIUM INDUSTRY CO., LTD.
NO.1 TAICHENG ROAD, BAOJI, SHAANXI, CHINA
TEL: 86-917-3382013 FAX: 86-917-3382316

Issued No.2010-0

The file copied is invalid.

Abnahmeprüfzeugnis DIN EN 10204-3.1

KME astrup

Auftraggeber:

Manfred J.C. Niemann Zentrale KG
Zentrale KG
Auf dem Dreieck 6

28197 Bremen
DE

KME Mansfeld GmbH
Lichtlöcherberg 40
06333 Hettstedt / Germany

E-Mail: Ute.Baude@kme.com

Datum	17.02.2022
Auftrag/Position	292016 / 5
Kundenmat.-Nr.	160216
Kundennummer	105402
Bestellnummer	U/55156797
Produktionsmeldung	755664
Materialnummer	C1211-4ST01-VM
Erzeugnis	Rundst.
Werkstoff	Cu-ETP EN13601 / 2021
Abmessung	10 mm X 4000 mm(min) - 4200 mm(max)
Normen	EN13601 Klasse A/2021
Lieferbedingungen	
	EN13601 Klasse A/2021
	10mm: -0,09 / 0 mm
	Ch/Btch: 21208131
Lieferzustand	R300 EN13601/2021

Gesamtgewicht

Netto: 503,00 kg

Anforderungen

Prüflos	**40000819339**
Probenr.	**2022011310**
Einheit	**X08131**
Zugfestigkeit min 300,0 N/qmm	347,8
Bruchdehnung A min 8,0 %	15,0
Dehngrenze Rp0,2 min 260,0 N/qmm	301,1
elektr. Leitfähigkeit min 58,0 MS/m	59,0
Cu min 99,90000 %	99,99765
Ag max 0,01500 %	0,00118
O max 0,04000 %	0,00006
Bi max 0,00050 %	0,00002
Pb max 0,00500 %	0,00015

Astrup AS -- 16972260001 -- Kobber bolt 10mm Cu-Etp / R300 -- 21208131

Abnahmeprüfzeugnis DIN EN 10204-3.1
Auftrag/Position 292016/5
Produktionsmeldung 755664

KME astrup

Astrup AS -- 16972260001 -- Kobber bolt 10mm Cu-Etp / R300 -- 21208131

Die Maß- und Formtoleranzen entsprechen den Bestellvorgaben. Es wird bestätigt, dass die Lieferung geprüft wurde und den Vereinbarungen bei der Bestellannahme entspricht.

Dieses Schreiben wurde maschinell erstellt und ist ohne Unterschrift gültig. Es ist durch nachstehende Person autorisiert.

KME Mansfeld GmbH
U. Baude

Acciaierie Valbruna S.p.A.

36100 VICENZA (Italia) - Viale della scienza, 25 z.i.
Telefono 0444.968211 - Fax 0444.963836
Stab.: 39100 BOLZANO (Italia) - Via A. Volta, 4/37
Telefono 0471.924111 - Fax 0471.924497

CERTIFICATO DI COLLAUDO - ABNAHMEPRUEFZEUGNIS - INSPECTION CERTIFICATE - CERTIFICAT DE RECEPTION

In conformità a : EN 10204 (2004) , 3.1 / ISO 10474 (2013) , 3.1
Nach/According to/Selon

Certificato nr. MEST871320 / 2022 / 2
Prüfung/Test/Essai

Cliente / Besteller/Purchaser/Client
VALBRUNA NORDIC AB
LOVARTSGATAN 7
65221 - KARLSTAD - SWEDEN - SE

Stato di fornitura : Hot rolled - Annealed Peeled
Lieferzustand / Delivery state / Etat de livraison

Produttore : Hersteller/Item/Usine productrice
ACCIAIERIE VALBRUNA S.P.A.

Tipo di Elaborazione: E+AOD
Erschmelzungsart / Melting process / Mode d'elaboration

Marchi di Fabbrica: AV
Zeichen des Lieferwerkes / Trade marks / Sigles de l'usine productrice

Ordine nr: R38651 ALFA LAVAL
Bestell / Your order / Commande

Qualità: S31803
Werkstoff/Grade/Nuance

Punzone del Collaudatore: MR
Stempel des Werkssachverständigen / Inspector's stamp/Poinçon de l'assayeur

Conferma ordine nr: EI21007412
Werks/Our Order/Ref nr.

Marca: V225MN
Markenbezeichnung / Brand / Nuance

Punzonatura: S31803
Kennzeichnung / Marking / Marquage

Avviso di Spedizione: D-VI22001903
Lieferanzeige/Packing list/B.L.

SPECIFICHE :
Anforderungen / Requirements / Exigences

Note:
Aufzeichnungen / Notes / Notes

MS-RB-4462 10 1.4462/F51/60 A MDS D47 5. S31803 A (0) ASTM A182 2021 S31803 A (1)	(0)Norsok-standard M-630 Edition 6, October 2013 Approval Norsok-standard M-650 Edition 4, September 2011 QTR N°56/A for forged bars and N°55/A for hot rolled bars. (1)For products machined directly from bar refer also to ASTM A479.
ASTM A182 2021 S32205 A (2) ASTM A276 2017 S31803 A ASTM A276 2017 S32205 A ASTM A479 2021 S31803 A ASTM A479 2021 S32205 A	(2)For products machined directly from bar refer also to ASTM A479.
ASTM E562 2019 . (3)	(3)19E01
ASTM G48 2011 METHOD A (4) EN 10088 PART 3 2014 1.4462 A EN 10272 2016. 1.4462 A	(4)11R15
NACE MR0103 2015 S31803 A (5) NACE MR0175 2015 S31803 A (6) ASME SA182 2021 S31803 A (7)	(5)ANSI/NACE MR0103/ISO 17945 November 23, 2015 (6)ANSI/NACE MR0175/ISO 15156-3 third edition November 23,2015 (7)Section II Part A 2021 EDITION For products machined directly from bar refer to ASME SA479.
ASME SA182 2021 S32205 A (8) ASME SA276 2021 S31803 A (9) ASME SA479 2021 S31803 A (A) ASME SA479 2021 S32205 A (B)	(8)Section II Part A 2021 EDITION For products machined directly from bar refer to ASME SA479. (9)Section II Part A 2021 EDITION (A)Section II Part A 2021 EDITION (B)Section II Part A 2021 EDITION

Tolleranza: k12
Toleranz/Allowance/Tolérance

Pos. nr.	Oggetto	Dimensioni - mm	Lunghezza - mm	Colata	Pezzi	Peso - KG	Lotto nr.
0010	Round	100,000	5467/ 5913	434702	15	5408,0	116119480

QUALITY MANAGEMENT SYSTEM CERTIFIED BY LLOYD'S REGISTER ACCORDING TO ISO 9001 : 2015, IATF 16949 : 2016, AS 9100D

Vicenza, 03/05/2022 VCQ008 - MEST035087	Direzione Qualità Qualitätsmanagement/Quality Management/Gestion Qualité R.BERTELLI	Direzione Prodotto Produktmanagement/Product Management/Direction Produit P.MESSORI	Pagina 1 di 6

Astrup AS -- 17031340001 -- Duplex bolt 100mm EN 1.4462/UNS S31803 Norsok MDS D47 -- 434702

1 av 6

PDF Create Trial www.nuance.com

Acciaierie Valbruna S.p.A.

36100 VICENZA (Italia) - Viale della scienza, 25 z.i.
Telefono 0444.968211 - Fax 0444.963836
Stab.: 39100 BOLZANO (Italia) - Via A. Volta, 4/37
Telefono 0471.924111 - Fax 0471.924497

CERTIFICATO DI COLLAUDO - ABNAHMEPRUEFZEUGNIS - INSPECTION CERTIFICATE - CERTIFICAT DE RECEPTION

In conformità a: EN 10204 (2004) , 3.1 / ISO 10474 (2013) , 3.1
Nach/According to/Selon

Certificato nr. MEST871320 / 2022 / 2
Prüfung/Test/Essai

Cliente / Besteller/Purchaser/Client
VALBRUNA NORDIC AB
LOVARTSGATAN 7
65221 - KARLSTAD - SWEDEN - SE

Stato di fornitura: Hot rolled - Annealed Peeled
Lieferzustand / Delivery state / Etat de livraison

Produttore: Hersteller/Item/Usine productrice
ACCIAIERIE VALBRUNA S.P.A.

Tipo di Elaborazione: E+AOD
Erschmelzungsart / Melting process / Mode d'elaboration

Marchi di Fabbrica: Zeichen des Lieferwerkes / Trade marks / Sigles de l'usine productrice: AV

Ordine nr: R38651 ALFA LAVAL
Bestell / Your order / Commande

Qualità: S31803
Werkstoff/Grade/Nuance

Punzone del Collaudatore: Stempel des Werkssachverständigen / Inspector's stamp/Poinçon de l'assayeur: MR

Conferma ordine nr: EI21007412
Werks/Our Order/Ref nr.

Marca: V225MN
Markenbezeichnung / Brand / Nuance

Punzonatura: S31803
Kennzeichnung / Marking / Marquage

Avviso di Spedizione: D-VI22001903
Lieferanzeige/Packing list/B.L.

TEST ALLO STATO DI FORNITURA

Test on delivery condition Prüefung auf lieferbereitem produkt test a l'etat de fourniture Prueba sobre el material así come entregado

1) L=longitudinale/längs, T=trasversale/quer, Q=Tangenziale/tangential

TEST	Provetta/ Probestab Specimen/Eprouvette Larg.diam.Spess. Breite Diam. Ocise Width Diam. Thickness Larg. diam. epais mm	°C	Posiz. Saggio Probenlage Location Emplacement	Snervamento Streckgrenze Yield Stress Limite elastique Rp 0,2% N/mm2	Snervamento Streckgrenze Yield Stress Limite elastique	Resistenza Zugfestigkeit Tensile strength Resistance à traction Rm N/mm2	Allungamento Bruchdehnung Elongation Allongement A5 %		Strizione Einschnürung Reduction of area Striction Z %		Resilienza Kerbschlagarbeit Impact Value Resilience			Durezza Härte Hardness Dureté HB		
Valori richiesti Anforderungen/Required values Valeurs demandées		min max		485	-	660 880	25	-	-	-	-			- 270		
A	10	20	L	498		722	37		66					237		
H	10	20	L	506		727	35		65					239		

Test On Delivering Condition

Test on delivery condition / Prüefung auf lieferbereitem produkt / Test a l'etat de fourniture / Prueba sobre el material así come entregado

TEST		min	max	
A	HRc		28,0	19,6
H	HRc		28,0	19,3

TEST ALLO STATO DI FORNITURA

Test on delivery condition / Prüefung auf lieferbereitem produkt / Test a l'etat de fourniture / Prueba sobre el material así come entregado

TEST		min	max	
A	Delta Ferrite	35,0	55,0	48,0 %

Charpy per ASTM E23

1) L=longitudinale/längs, T=trasversale/quer, Q=Tangenziale/tangential

TEST	Provetta/ Probestab Specimen/Eprouvette Larg.diam.Spess. Breite Diam. Ocise Width Diam. Thickness Larg. diam. epais mm	°C	Posiz. Saggio Probenlage Location Emplacement	Resilienza Kerbschlagarbeit Impact value Resilience KV2 J			Espansione laterale Lateral Expansion			Shear Shear		
Valori richiesti Anforderungen/Required values Valeurs demandées		min max		45	45	45	-	-	-	-	-	-
E	10X10	-46	L	208	198	200						

QUALITY MANAGEMENT SYSTEM CERTIFIED BY LLOYD'S REGISTER ACCORDING TO ISO 9001 : 2015, IATF 16949 : 2016, AS 9100D

Vicenza, 03/05/2022
VCQ008 - MEST035087

Direzione Qualità
Qualitätsmanagement/Quality Management/Gestion Qualité
R.BERTELLI

Direzione Prodotto
Produktmanagement/Product Management/Direction Produit
P.MESSORI

Pagina 2 di 6

Astrup AS -- 17031340001 -- Duplex bolt 100mm EN 1.4462/UNS S31803 Norsok MDS D47 -- 434702
2 av 6
PDF Creator Trial www.nuance.com

Acciaierie Valbruna S.p.A.

36100 VICENZA (Italia) - Viale della scienza, 25 z.i.
Telefono 0444.968211 - Fax 0444.963836
Stab.: 39100 BOLZANO (Italia) - Via A. Volta, 4/37
Telefono 0471.924111 - Fax 0471.924497

CERTIFICATO DI COLLAUDO - ABNAHMEPRUEFZEUGNIS - INSPECTION CERTIFICATE - CERTIFICAT DE RECEPTION

In conformità a: EN 10204 (2004) , 3.1 / ISO 10474 (2013) , 3.1
Nach/According to/Selon

Certificato nr. MEST871320 / 2022 / 2
Prüfung/Test/Essai

Cliente / Besteller/Purchaser/Client
VALBRUNA NORDIC AB
LOVARTSGATAN 7
65221 - KARLSTAD - SWEDEN - SE

Stato di fornitura: Hot rolled - Annealed Peeled
Lieferzustand / Delivery state / Etat de livraison

Produttore:
Hersteller/Item/Usine productrice
ACCIAIERIE VALBRUNA S.P.A.

Tipo di Elaborazione: E+AOD
Erschmelzungsart / Melting process / Mode d'elaboration

Marchi di Fabbrica: AV
Zeichen des Lieferwerkes / Trade marks / Sigles de l'usine productrice

Ordine nr: R38651 ALFA LAVAL
Bestell / Your order / Commande

Qualità: S31803
Werkstoff/Grade/Nuance

Punzone del Collaudatore: MR
Stempel des Werkssachverständigen / Inspector's stamp/Poinçon de l'assayeur

Conferma ordine nr: EI21007412
Werks/Our Order/Ref nr.

Avviso di Spedizione: D-VI22001903
Lieferanzeige/Packing list/B.L.

Marca: V225MN
Markenbezeichnung / Brand / Nuance

Punzonatura: S31803
Kennzeichnung / Marking / Marquage

Test on delivery condition per ASTM A370

1) L=longitudinale/longs. T=trasversale/quer. D=Tangenziale/tangential

TEST	Provetta/ Prelevata Specimen/Eprouvette Larg.diam.Spess. Broite Diam. Dicke Width Diam. Thickness Larg. diam. epais. mm	°C	Posiz. Saggio Probenlage Location Emplacement	Snervamento Streckgrenze Yield Stress Limite elastique Rp 0,2% N/mm2	Snervamento Streckgrenze Yield Stress Limite elastique	Resistenza Zugfestigkeit Tensile strength Resistance à traction Rm N/mm2	Allungamento Bruchdehnung Elongation Allongement E 4d %		Strizione Einschnürung Reduction of area Striction RA %		Resilienza Kerbschlagarbeit Impact Value Resilience			Durezza Härte Hardness Dureté HB	
Valori richiesti Anforderungen/Required values Valeurs demandées		min / max		485	-	660 / 860		25	-	45	-			- / 270	
D	12,5	20	L	485		717		41		74				233	

Test on delivery condition per ASTM A370

TEST		min	max
D	HRc		28,0 / 18,0

Test on delivery condition per ASTM A370

1) L=longitudinale/longs. T=trasversale/quer. D=Tangenziale/tangential

TEST	Provetta/ Prelevata Specimen/Eprouvette Larg.diam.Spess. Broite Diam. Dicke Width Diam. Thickness Larg. diam. epais. mm	°C	Posiz. Saggio Probenlage Location Emplacement	Snervamento Streckgrenze Yield Stress Limite elastique Rp 0,2% N/mm2	Snervamento Streckgrenze Yield Stress Limite elastique	Resistenza Zugfestigkeit Tensile strength Resistance à traction Rm N/mm2	Allungamento Bruchdehnung Elongation Allongement E 4d %		Strizione Einschnürung Reduction of area Striction RA %		Resilienza Kerbschlagarbeit Impact Value Resilience			Durezza Härte Hardness Dureté HB	
Valori richiesti Anforderungen/Required values Valeurs demandées		min / max		450	-	620	-	25	-	-	-			- / 270	
F	12,5	20	T	518		743		29		65				233	

Test on delivery condition per ASTM A370

TEST		min	max
F	HRc		28,0 / 18,0

Charpy per ASTM E23

1) L=longitudinale/longs. T=trasversale/quer. D=Tangenziale/tangential

TEST	Provetta/ Prelevata Specimen/Eprouvette Larg.diam.Spess. Broite Diam. Dicke Width Diam. Thickness Larg. diam. epais. mm	°C	Posiz. Saggio Probenlage Location Emplacement	Resilienza Kerbschlagarbeit Impact Value Resilience KV2			Espansione laterale Lateral Expansion			Shear Shear		
Valori richiesti Anforderungen/Required values Valeurs demandées		min / max		45	45	45	-	-	-	-	-	-
G	10X10	-46	T	91	93	74						

QUALITY MANAGEMENT SYSTEM CERTIFIED BY LLOYD'S REGISTER ACCORDING TO ISO 9001 : 2015, IATF 16949 : 2016, AS 9100D

Vicenza, 03/05/2022
VCQ008 - MEST035087

Direzione Qualità
Qualitätsmanagement/Quality Management/Direction Qualité
R.BERTELLI

Direzione Prodotto
Produktmanagement/Product Management/Direction Produit
P.MESSORI

Pagina 3 di 6

Astrup AS -- 17031340001 -- Duplex bolt 100mm EN 1.4462/UNS S31803 Norsok MDS D47 -- 434702

3 av 6

PDF Create Trial www.fineprint.com

Acciaierie Valbruna S.p.A.

36100 VICENZA (Italia) - Viale della scienza, 25 z.i.
Telefono 0444.968211 - Fax 0444.963836
Stab.: 39100 BOLZANO (Italia) - Via A. Volta, 4/37
Telefono 0471.924111 - Fax 0471.924497

CERTIFICATO DI COLLAUDO - ABNAHMEPRUEFZEUGNIS - INSPECTION CERTIFICATE - CERTIFICAT DE RECEPTION

In conformità a : EN 10204 (2004) , 3.1 / ISO 10474 (2013) , 3.1
Nach/According to/Selon

Certificato nr. MEST871320 / 2022 / 2
Prüfung/Test/Essai

Cliente / Besteller/Purchaser/Client
VALBRUNA NORDIC AB
LOVARTSGATAN 7
65221 - KARLSTAD - SWEDEN - SE

Stato di fornitura : Hot rolled - Annealed Peeled
Lieferzustand / Delivery state / Etat de livraison

Produttore : ACCIAIERIE VALBRUNA S.P.A.
Hersteller/Item/Usine productrice

Tipo di Elaborazione: E+AOD
Erschmelzungsart / Melting process / Mode d'elaboration

Marchi di Fabbrica: AV
Zeichen des Lieferwerkes / Trade marks / Signes de l'usine productrice

Ordine nr: R38651 ALFA LAVAL
Bestell / Your order / Commande

Qualità: S31803
Werkstoff/Grade/Nuance

Punzone del Collaudatore: MR
Stempel des Werksachverständigen / Inspector's stamp/Poinçon de l'essayeur

Conferma ordine nr: EI21007412
Werks/Our Order/Ref nr.

Marca: V225MN
Markenbezeichnung / Brand / Nuance

Punzone/Lune: S31803
Kennzeichnung / Marking / Marquage

Avviso di Spedizione: D-VI22001903
Lieferanzeige/Packing list/B.L.

Charpy per ISO 148-1

1) L=long.tal/nel/le/lange, T=trasversale/quer, Q=Tangenziale/tangential

TEST	Provetta/ Probestück Specimen/Éprouvette Larg.diam.Spess. Breite Diam. Dicke Width Diam. Thickness Larg. diam. spess. mm	°C	Posiz. Saggio Probenlage Location Emplacement	Resilienza Kerbschlagarbeit Impact value Resilience KV2 J			Espansione laterale Lateral Expansion			Shear Shear		
Valori richiesti Anforderungen/Required values Valeurs demandées		min max		100	100	100	-			-	-	-
K	10X10	20	L	290	290	298						
L	10X10	20	L	283	281	280						

Ferrite content tested according to ASTM E562.

Analisi chimica

Chemische Zusammensetzung/Chemical Analysis/Analyse chimique

Colata /Heat Schmelze/Coulée	PRE	C %	Si %	Mn %	Cr %	Mo %	Cu %	Ni %	W %	P %	S %	N %			
	min 31,0 max 38,0	- 0,030	- 1,00	- 2,00	22,00 23,00	3,00 3,50	-	4,50 6,50	-	- 0,030	- 0,015	0,14 0,20	- -	- -	- -
434702	35,0	0,015	0,45	1,44	22,20	3,10	0,31	5,82	0,019	0,025	0,003	0,16			

Corrosion test in 16% sulfuric acid and copper sulfate solutions

Test standard: UNI EN ISO 3651-2 Method A

Test	Heat treatment before test	Length of Period (h)	Test temp (°C)	Bend Angle (°)	Ø spindle (mm)	Result of visual inspection at 20 x magnification after bend test	Result
Intergranular corrosion	Sensitized T1	20	boil	90	5	Absence of cracks	SATISFACTORY

Material is free from intermetallic phases and precipitates examined at 500x magnification.
Corrosion test per ASTM G48 PRACTICE A (25°C/24h): no pitting at 20x magnification.
Reduction ratio = 2,9 : 1
Material annealed 1080°C for 150'(total time)/water cooled.
Ultrasonic volumetric test according to ASTM A388 : pass

QUALITY MANAGEMENT SYSTEM CERTIFIED BY LLOYD'S REGISTER ACCORDING TO ISO 9001 : 2015, IATF 16949 : 2016, AS 9100D

Vicenza, 03/05/2022 VCQ008 - MEST035087	Direzione Qualità Qualitätsmanagement/Quality Management/Gestion Qualité R.BERTELLI	Direzione Prodotto Produktmanagement/Product Management/Direction Produit P.MESSORI	Pagina 4 di 6

Astrup AS -- 17031340001 -- Duplex bolt 100mm EN 1.4462/UNS S31803 Norsok MDS D47 -- 434702

4 av 6

PDF Create & Trial www.nuance.com

Acciaierie Valbruna S.p.A.

36100 VICENZA (Italia) - Viale della scienza, 25 z.i.
Telefono 0444.968211 - Fax 0444.963836
Stab.: 39100 BOLZANO (Italia) - Via A. Volta, 4/37
Telefono 0471.924111 - Fax 0471.924497

CERTIFICATO DI COLLAUDO - ABNAHMEPRUEFZEUGNIS - INSPECTION CERTIFICATE - CERTIFICAT DE RECEPTION

In conformità a : EN 10204 (2004) , 3.1 / ISO 10474 (2013) , 3.1
Nach/According to/Selon

Certificato nr. MEST871320 / 2022 / 2
Prüfung/Test/Essai

Cliente / Besteller/Purchaser/Client
VALBRUNA NORDIC AB
LOVARTSGATAN 7
65221 - KARLSTAD - SWEDEN - SE

Ordine nr: R38651 ALFA LAVAL
Bestell / Your order / Commande

Conferma ordine nr: EI21007412
Werks/Our Order/Ref nr

Avviso di Spedizione: D-VI22001903
Lieferanzeige/Packing list/B.L

Stato di fornitura : Hot rolled - Annealed Peeled
Lieferzustand / Delivery state / Etat de livraison

Tipo di Elaborazione: E+AOD
Erschmelzungsart / Melting process / Mode d'élaboration

Qualità: S31803
Werkstoff/Grade/Nuance

Marca: V225MN
Markenbezeichnung / Brand / Nuance

Produttore :
Herstellerfirm/Usine productrice
ACCIAIERIE VALBRUNA S.P.A.

Marchi di Fabbrica: AV
Zeichen des Lieferwerkes / Trade marks / Signes de l'usine productrice

Punzone del Collaudatore: MR
Stempel des Werksachverständigen / Inspection stamp/Poinçon de l'assayeur

Punzonatura: S31803
Kennzeichnung / Marking / Marquage

Corrosion test in ferric chloride solutions

Test standard: ASTM G48 method A [25C/24h]

Pickling	Test	Length of Period [h]	Test temp [°C]	corrosion rate [g/m²]		
				min	max	
5' at 60°C (20% HNO3 + 5% HF)	Pitting corrosion	24	25		4,0000	0,2300

NOTES
No pitting at 20 x magnification

Allegati / Anlagen / Enclosure / Attachments :
ME22000098

Sono state soddisfatte tutte le condizioni richieste
Die gestellten Anforderungen sind k. Anlage erfüllt
The material has been furnished in accordance with the requirements
Le materiel à été trouvé conforme aux exigences

Controllo antimescolanza con tecnica XRF/OES portatile : OK
Vermischungsprüfung durch XRF/OES Gerät geführt
Antimixing testing performed with XRF/OES portable : OK
Contrôle antimélange par technique XRF/OES portable : OK

Controllo visivo e dimensionale: soddisfa le esigenze
Besichtigung und Ausmessung: ohne Beanstandung
Visual inspection and dimensional checks satisfactory
Contrôle visuel et dimensions: satisfaisant

Melted, poured and manufactured in Italy No welding or weld repair Material free from Mercury contamination

We declare that the finished product is checked for radioactive contamination by the portal system when it leaves the production plant.

The Quality Management System is also Certified according Pressure Equipment Directive 2014/68/EU Annex 1,chapt.4.3 by TÜV and LLOYD'S
Any act of tampering, modification, alteration, counterfeiting and/or falsification and/or any other action which modifies the contents of this test certificate shall constitute a violation of applicable civil and criminal laws. Acciaierie Valbruna shall protect its rights and interests before any competent court, authority and jurisdiction.
Maxival and/or Valplus grades/products are manufactured with lade techniques to control composition, distribution, size and shape of non-metallic inclusions for improved machinability.
The supplied product conforms to requirements expressly requested by the purchaser and conforms to requirements specified by certified norms and standards. Should the product be used for more severe, critical and/ or in any case different applications than those the material is generally intended for, any different and/or supplementary requirements shall be specifically demanded, at least, upon order of the Product by the Purchaser. Acciaierie Valbruna SpA shall not be responsible for any improper use of the Products.

QUALITY MANAGEMENT SYSTEM CERTIFIED BY LLOYD'S REGISTER ACCORDING TO ISO 9001 : 2015, IATF 16949 : 2016, AS 9100D

Vicenza, 03/05/2022	Direzione Qualità	Direzione Prodotto	Pagina
VCQ008 - MEST035087	R.BERTELLI	P.MESSORI	5 di 6

Astrup AS -- 17031340001 -- Duplex bolt 100mm EN 1.4462/UNS S31803 Norsok MDS D47 -- 434702

PDF Create & Trial www.nuance.com

	Acciaierie Valbruna S.p.A. 36100 VICENZA (Italia) - Viale della scienza, 25 z.i. Stab.: 39100 BOLZANO (Italia) - Via A. Volta, 4	**CERTIFICATO** Certificate - Zeugnis - Certificat **N° ME22000098**	**Pag 6 di 6**
		ESAME METALLOGRAFICO Metallographic examination - Mikroschliff Prüfung - Metallographic	

mod. ME02 MEST871320 / 2022 / 2

Secondo : MDS D47
According to - Nach - Selon

Cliente : VALBRUNA NORDIC AB Customer - Besteller - Client	**Conferma : EI21007412/0010/001** Confirmation - Bestätigung - Confirmation	**Lotto nr : 116119480** Mill order - Uns.Auftr. - A/R

MARCA Grade Qualität Nuance	DIMENSIONI Size Abmessungen Dimensions	COLATA Heat Schmelze Coulée	BARRE Bars Stäbe Barres	PESO Weight Gewicht Poids	LUNGHEZZA Length Länge Longueur	
V225MN	Round 100,000 mm	434702	N. 15	KG : 5408,0	5467	5913

T. TERMICO H.Treatement Wärmebehandlung T.Termique	ESECUZIONE Condition Ausführung Execution	Condizioni Superficiali Surface Oberfläche Surface Conditions	TOLLERANZA Tolerance Toleranz Tolerance
Annealed	Peeled		k12

500x

NOTE :
Notes - Stellungnahme - Notes

NOME T.Nassi Name - Nom **DATA : 29/10/21** Date - Date **FIRMA** Tommaso Nassi		**COLLAUDATORE** Inspector - Abnahmesachverst - Inspecteur

Astrup AS -- 17031340001 -- Duplex bolt 100mm EN 1.4462/UNS S31803 Norsok MDS D47 -- 434702

PDF Create 8 Trial www.nuance.com

6 av 6

ROLDAN, S.A. - Rostfreier Stahl

WERK

Santo Tomás de las Ollas, S/N
Apdo. de Correos 11
PONFERRADA (LEÓN)
TEL.: +34 987 44 61 00
FAX: +34 987 44 61 01
E-MAIL: rdn_fabrica@acerinox.com

HAUPTVERWALTUNG

Santiago de Compostela, 100-3º
28035 MADRID (ESPAÑA)
TEL.: +34 913 98 52 57
FAX: +34 913 98 51 93
E-MAIL: roldan@acerinox.com

ABNAHMEPRÜFZEUGNIS

3.1

EN 10204

Sistema de Gestión ISO 9001:2015
TÜVRheinland CERTIFICADO
www.tuv.com ID 0081003143

CE 0432 11 0432-CPR-00190-01

ROLDAN S.A. Z-30.3-6 MPA NRW

EN 10.088:5

2018/033228	DATUM 15/10/2018	BLATT 1	LIEFERSCHEIN NR. 2018/005713

WERKSTOFF ACX-917 EN10088:3 (1.4462.)

KUNDE Stappert Deutschland GmbH

ABMESSUNGEN 16,00 mm. | Surface finish according EN10088-3 Table 7:2H

LÄNGE 3.025 mm. **TOLERANZ** ISO h9

PRÜFGEGENSTAND [41] Stabstahl rund, geglüht, gezogen, poliert

ANFORDERUNGEN EN10088:3 **KUNDEBESTELLUNG** 30298/N

ZUGVERSUCH EN ISO 6892-1

ENTSPRECHEND **AUSGABE**

INTERKRISTALLINE KORROSION EN ISO 3651-2 method A: SATISFACTORY WITHOUT OBJETIONS

BESICHTIGUNG UND MASSKONTROLLE WITHOUT OBJECTIONS Spektrometrical Identity Test: O.K.

KERBSCHLAGVERSUCH, PROBENFORM **MATERIAL FREE FROM RADIOACTIVITY**

BESTELL N°	VORGANGS NR.	MARKE / KISTE	SCHMELZE NR.	PROBE	GEWICHT
DW06870 41	DW06870 41 1	70027 / JJB4406	T7RN	T7RN	434

ERSCHMELZUNGSART

EAF + AOD +CC

ZEICHEN DES ABNAHMEBEAUFTRAGTER

R3

HERSTELLERZEICHEN

RDN

ABNAHMEBEAUFTRAGTER

JUAN JOSE ALVAREZ RODRIGUEZ

QUALITY CONTROL REPRESENTATIVE

KENNZEICHNUNG

HEAT NUMBER

GRADE (ACX-917)

MECHANISCHE EIGENSCHAFTEN

SCHMELZE	PROBE	ABMESSUNGEN DES PROBESTABS	BEMERK T°.	Rm MPa	Rp 0,2% MPa	Rp 1% MPa	Z %	A % L-50	A % L-40	Agt %	KERBSCHLAGZÄHIGKEIT ISO-V (J) 20°C	20°C	20°C	HÄRTE HB	DAUERS-CHWING-VERSUCH	BIEGEPRÜ-FUNG	QUERSCHNITT mm²	Kg / m
T7RN				993	822	949	70	22						295				
ANFORDERUNGEN		EN ISO 377		850 1100	650			12										

CHEMISCHE ZUSAMMENSETZUNG %

SCHMELZE	C	P	S	Si	Mn	Cr	Ni	Mo	Ti	N	Cu	Co	Nb	Al
T7RN	0,0190	0,0250	0,0010	0,3060	1,6360	22,2450	4,7450	3,1670	0,0190	0,1600	0,0640	0,0340	0,0150	0,0080
ANFORDERUNGEN	0,0300	0,0350	0,0150	1,0000	2,0000	21,0000 23,0000	4,5000 6,5000	2,5000 3,5000		0,1000 0,2200				

BEMERKUNGEN

TL080/HRC4462. AISI 2205. UNS S31803/S32205. PREN=36. Heat treatment: direct annealing.

Dimensions and shape acc. to EN10278.

Rissgeprüft nach EN 10277-1 Tabelle 1. Crack tested acc. to EN10277 table 1.

Forging reduction ratio = [226 / diameter, in mm]^2. Corrosion test acc. to EN ISO 3651-2 method C: OK.

CEB_A1.2

PRÜFUNGEN **ANFORDERUNGEN**

WÄRMEBEHANDLUNG | Crack tested acc. to EN10277 table 1 class 3

STAPPERT

RESTAMPING CERTIFICATE
acc. to EN 764-5

21/02/2019

STAPPERT Deutschland GmbH
An der Strusbek 54
D-22926 Ahrensburg
DEUTSCHLAND

Prosessmetall AS
Slettebrekkdalen 1
N-5303 Follese
NORGE

Product Info
-
Bright bar, Tol. acc. DIN EN 10278 (h9),, grade 1.4462, 16 mm

Customer PO ref

Cust. No	103007
Document	BT520859-4-1
Cust. Ref.	82227 Jarle
Customer material number	
Order N°	520859

Heat	PCS	kg	Length
T7RN	8	38	2953 mm

Country of origin : ESPANA
Producer : ROLDAN S.A.

ATTEST EN 10204 / 3.1

Restamped from: **SDL**

We confirm that the original marking of the supplied parts was transferred. The parts have been correctly restamped with the STAPPERT Brand logo, personal stamp, heat-no and grade.

Restamping is approved by TÜV NORD Systems GmbH & Co.KG pursuant to its permission of 01/02/17, with certificate # 07/701/1409/UH/3758/17.
This restamping certificate was generated automatically and is valid without signature.

STAPPERT Deutschland GmbH
An der Strusbek 54
22926 - Ahrensburg

Daniel Lantz - SDL
Restamping operator

Management: Peter Kolz, Sarah Vaison de Fontaube
Head office: Düsseldorf, Handelsregister Düsseldorf, HRB 20, Rechtsform GmbH
Düsseldorf HRB 20 VAT No: DE119268333, 103/5760/0080

21/02/19 - 09:53

STAPPERT

UMSTEMPELBESCHEINIGUNG
nach EN 764-5

21/02/2019

STAPPERT Deutschland GmbH
An der Strusbek 54
D-22926 Ahrensburg
DEUTSCHLAND

Prosessmetall AS
Slettebrekkdalen 1
N-5303 Follese
NORGE

Produktinfo
-
Rund, blank, Tol. DIN EN 10278/h9,Werkstoff 1.4462, 16 mm

Bst.-Nr.	
Kunde	103007
Dokument	BT520859-4-1
Ref. Kunde	82227 Jarle
Kundenartikelnummer	
Best.Nr.	520859

Charge	Stk	KGS	Länge
T7RN	8	38	2953 mm

Herkunftsland : ESPANA
Hersteller : ROLDAN S.A.

ATTEST EN 10204 / 3.1

Umgestempelt durch: **SDL**

Wir bestätigen, dass die Originalkennzeichnung des/der gelieferten Teils/e übertragen wurde.
Zum Zeichen der erfolgten Prüfung und ordnungsgemäßen Umstempelung wurde/n das/die Teil/e mit dem STAPPERT Brand Logo, Umstempelzeichen, Charge und Werkstoff gekennzeichnet.

Die Umstempelung erfolgt mit Zustimmung des TÜV NORD Systems GmbH & Co.KG gemäß Genehmigung vom 01/02/17 mit Prüf / 07/701/1409/UH/3758/17.
Die Umstempelbescheinigung wurde maschinell erstellt und ist ohne Unterschrift gültig.

STAPPERT Deutschland GmbH
An der Strusbek 54
22926 - Ahrensburg

Daniel Lantz - SDL
Der Umstempelungsberechtigte

Geschäftsführung: Peter Kolz, Sarah Vaison de Fontaube
Sitz der Gesellschaft: Düsseldorf, Handelsregister Düsseldorf, HRB 20, Rechtsform GmbH
Düsseldorf HRB 20 UID-Nr.: DE119268333, 103/5760/0080

21/02/19 - 09:53

BAOJI TITANIUM INDUSTRY CO., LTD

BAOTi
www.baoti.com

MATERIAL CERTIFICATION

NO: T-20210550067
DATE: 02-01-2021

BAOTI's management system has been approved according to the requirement of AS9100, ISO9001, ISO14001 and OHSAS 18001.

EN 10204 3.1

Commodity: TITANIUM BAR	Finish: ANNEALED
Specification: ASTM B348-2019/ASTM B381-2019,Gr.5	

Size[mm]	Quantity[pc]	Net Weight[kg]	Heat No.	Lot No.
Φ115×2000～3000	4	484	20208528	20053959

Chemical Composition (wt. %)

		Ti	Al	V	Fe	C	N	H	O	Each	Total
Requirement		Remainder	5.5~6.75	3.5~4.5	≤0.40	≤0.08	≤0.05	≤0.015	≤0.20	<0.10	<0.40
Result	Top	Remainder	6.27	4.1	0.14	0.04	<0.01	0.002	0.17	<0.10	<0.40
	Bottom	Remainder	6.22	4.1	0.14	0.04	0.01	0.002	0.18		

Tensile Test

Requirement		Tensile Strength (MPa)	Yield Strength 0.2 (MPa)	Elongation A4D (%)	Reduction of Area (%)	HRC
Standard Values	L	≥895	≥828	≥10	≥25	/
Result	L	981	891	17.5	39	33.0/33.0/33.0
	L	974	884	17.0	40	34.0/33.5/33.5

Other Tests

Dimensional Inspection	Visual Inspection	Macrostructure Test	UT Inspection (AMS2631E Class B)
ACCEPTABLE	ACCEPTABLE	ACCEPTABLE	ACCEPTABLE
Transus Temperature(℃)	VAR/EB	Heat Treatment	/
1016	VAR(2)	750℃/1.5h.AC	/

I hereby certify this product conforms to ALL specifically listed technical requirements, and other requirements for these specifications. Furthermore, I certify the above stated quantitative results were derived from testing and analysis, and are in accordance with the referenced specification(s) requirements. No mercury contamination and radio-activity.

Note:
1.Hydrogen ----- product analysis.
2.According to TR2000 MDS T01, rev 5，NORSOK M-650 MDS T01. REV.4

QUALITY DEPARTMENT

BAOJI TITANIUM INDUSTRY CO., LTD.
NO.88 HIGH-TECH ROAD, BAOJI, SHAANXI, CHINA
TEL: 86-917-3382013 FAX: 86-917-3382316

Issued No.2019-0 The file copied is invalid.

Astrup AS -- 16156670004 -- Titan bolt gr 5 115mm ASTM B348 Norsok MDS 650 TR2000 --

5. TEST REPORT

Transmark Subsea

Date created: 29.06.2022
Status: Approved
Approved By: leifhugo
Date Approved: 08.07.2022

CABLE TEST REPORT STANDARD

Date:	29.03.2023	P/N: 219428		S/N: 29526
Sales Order:	32859 3444-9	Client PN/Descr:	Cable Assy LoVe 35 mm cable	
Client ref/PO:	600008475	Test voltage (V):	500 V	
Cable length:	500 m	IR acc. criteria:	>1GΩ	

Test results

Connector 1:	Connector 2:		Ω	Ω
Pin no.:	**To Pin No.:**	**To:**	**IR**	**CR**
1	1		>1GΩ	1,024
2	2		>1GΩ	1,023
3,4 NC (loop)	3,4 NC (loop)		>1GΩ	--
1+2		Housing ROV-end	>1GΩ	--
	1+2	Housing Frame end	>1GΩ	--
All conductors to ground			>1GΩ	--

Electric test performed and results are within acceptance criteria ☑

COMMENT:

Test equipment S/N: 101711996 Megger MIT-1025

Measure by:	FA Jacobsen	Witness by:	
Print name:	Finn Arne Jacobsen	Print name:	Erik Holten

This document contains information proprietary to Transmark Subsea and shall not be reproduced or disclosed for any purpose other than that for which it is furnished without the prior written permission of Transmark Subsea AS

Transmark Subsea

Date created: 24.10.2022
Status: Approved
Approved By: halvard
Date Approved: 24.10.2022

FIBEROPTIC TEST REPORT STANDARD

Date:	29.03.2023	P/N:	219428	S/N: 29526
Sales Order:	32859	Client PN/Descr:	Sammenstill Cable Assy LoVe, teg 219428	
Client ref/PO:	600008475	Powermeter ☐ OTDR ☒	Test: Wavelength λ ☒ SM : 1310 **nm** , 1550 **nm** ☐ MM: 850 **nm** , 1300 **nm**	
Cable length:	500 m.	Max attenuation:	2,0 dB	

Test results

Connector 1 Seacon 7741-101	**Connector 2: Siemens FO**	**SM 9/125 nm**	**SM 9/125 nm**	**MM 50/125**	**MM 50/125**
Pin no.:	**To Pin No.:**	**1310 nm**	**1550nm**	**850 nm**	**1300 nm**
Fiber 1	Fiber 1	1,13 dB	1,04 dB		
Fiber 2	Fiber 2	1,34 dB	1,12 dB		
Fiber 5	Fiber 5	1,15 dB	0,98 dB		

FO test performed and results are within acceptance criteria ☒

COMMENT:

Test equipment: OTDR FTB 200 S/N : 387021

Measure by:	Manuel H.	Witness by:	F.A. Jacobsen
Print name:	Manuel Hernandez	Print name:	Finn Arne Jacobsen

This document contains information proprietary to Transmark Subsea and shall not be reproduced or disclosed for any purpose other than that for which it is furnished without the prior written permission of Transmark Subsea AS

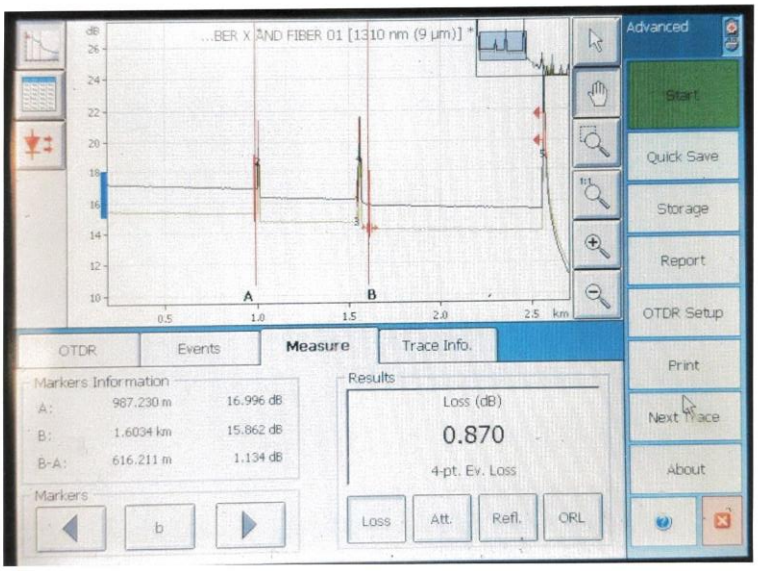
...BER X AND FIBER 01 [1310 nm (9 µm)] *
Advanced
Start
Quick Save
Storage
Report
OTDR Setup
Print
Next Trace
About
OTDR
Events
Measure
Trace Info.
Markers Information
A: 987.230 m 16.996 dB
B: 1.6034 km 15.862 dB
B-A: 616.211 m 1.134 dB
Markers
b
Results
Loss (dB)
0.870
4-pt. Ev. Loss
Loss
Att.
Refl.
ORL

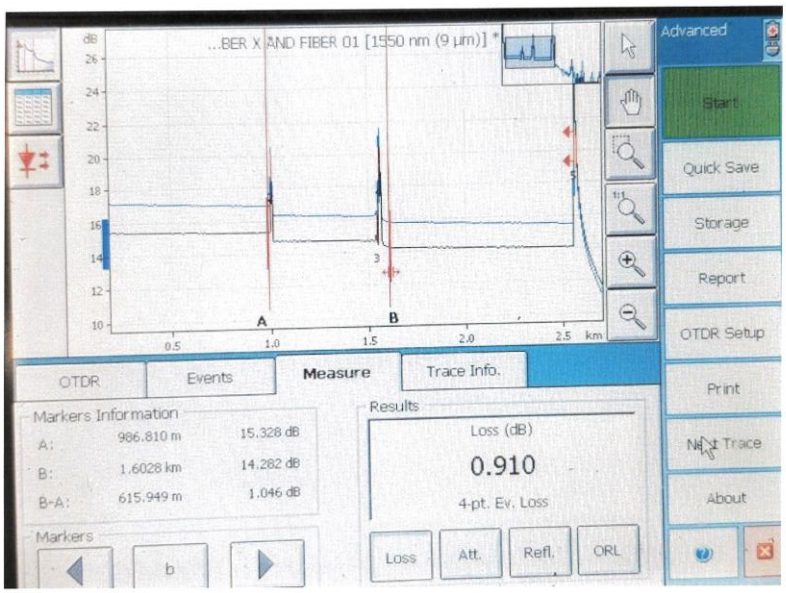
...BER X AND FIBER 01 [1550 nm (9 µm)] *
Advanced
Start
Quick Save
Storage
Report
OTDR Setup
Print
Next Trace
About
OTDR
Events
Measure
Trace Info.
Markers Information
A: 986.810 m 15.328 dB
B: 1.6028 km 14.282 dB
B-A: 615.949 m 1.046 dB
Markers
b
Results
Loss (dB)
0.910
4-pt. Ev. Loss
Loss
Att.
Refl.
ORL

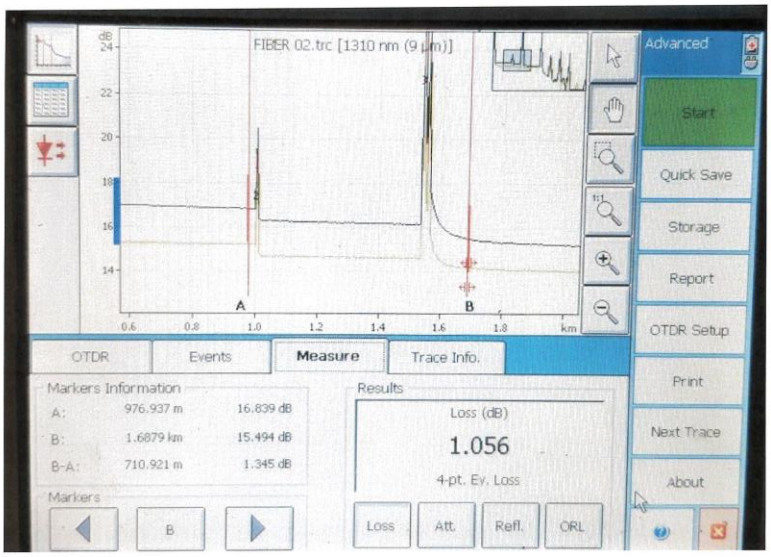
FIBER 02.trc [1310 nm (9 µm)]
Advanced
Start
Quick Save
Storage
Report
OTDR Setup
Print
Next Trace
About
OTDR
Events
Measure
Trace Info.
Markers Information
A: 976.937 m 16.839 dB
B: 1.6879 km 15.494 dB
B-A: 710.921 m 1.345 dB
Markers
Results
Loss (dB)
1.056
4-pt. Ev. Loss
Loss
Att.
Refl.
ORL

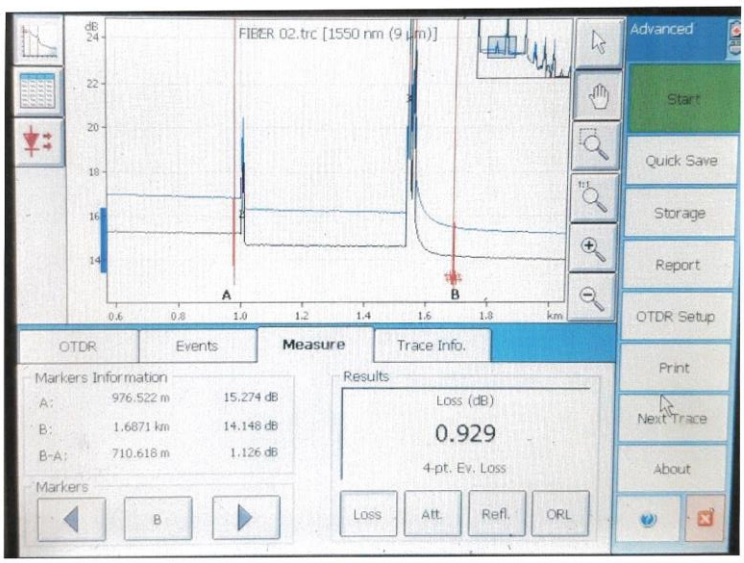
FIBER 02.trc [1550 nm (9 µm)]
Advanced
Start
Quick Save
Storage
Report
OTDR Setup
Print
Next Trace
About
OTDR
Events
Measure
Trace Info.
Markers Information
A: 976.522 m 15.274 dB
B: 1.6871 km 14.148 dB
B-A: 710.618 m 1.126 dB
Markers
Results
Loss (dB)
0.929
4-pt. Ev. Loss
Loss
Att.
Refl.
ORL

FIBER 05.trc [1310 nm (9 µm)]
dB
24
22
20
18
16
14
A
B
0.8
1.0
1.2
1.4
1.6
1.8km
Advanced
Start
Quick Save
Storage
Report
OTDR Setup
Print
Next Trace
About
OTDR
Events
Measure
Trace Info.
Markers Information
A: 976.937 m 16.929 dB
B: 1.6118 km 15.770 dB
B-A: 634.882 m 1.159 dB
Markers
B
Results
Loss (dB)
0.896
4-pt. Ev. Loss
Loss
Att.
Refl.
ORL

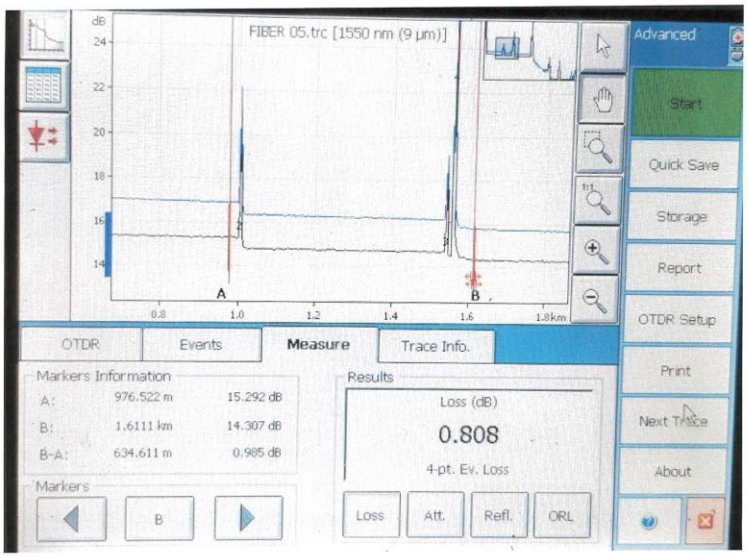
FIBER 05.trc [1550 nm (9 µm)]
dB
24
22
20
18
16
14
A
B
0.8
1.0
1.2
1.4
1.6
1.8km
Advanced
Start
Quick Save
Storage
Report
OTDR Setup
Print
Next Trace
About
OTDR
Events
Measure
Trace Info.
Markers Information
A: 976.522 m 15.292 dB
B: 1.6111 km 14.307 dB
B-A: 634.611 m 0.985 dB
Markers
B
Results
Loss (dB)
0.808
4-pt. Ev. Loss
Loss
Att.
Refl.
ORL